# Crown E Series
# User's Manual

FME 20W / FME 100W BROADCAST TRANSMITTER

87.5 – 108 MHz STEREO AND MULTIPLEX

WITH TCP/IP MONITORING*

**depending on options*

©2013 Crown Broadcast, a division of
International Radio & Electronics Corporation
25166 Leer Drive, Elkhart, Indiana, 46514-5425 U.S.A.
(574) 262-8900

**web: www.crownbroadcast.com - e-mail: fmsales@irec1.com**

# TABLE OF CONTENTS

**1. INTRODUCTION ..... 6**
1.1. Crown Broadcast History ..... 6
1.2. Before you start ..... 7
**2. DESCRIPTION ..... 8**
2.1. General description ..... 8
2.2. Accessories ..... 8
2.3. Crown Broadcast FME 20/100 W Description ..... 9
2.3.1. Front panel ..... 9
2.3.2. Rear panel ..... 10
2.3.3. Opened cover ..... 11
2.3.4. Synoptic ..... 12
2.3.5. 2U Rack ..... 13
2.4. Protecting the transmitter ..... 13
2.4.1. Surge Protector ..... 13
2.4.2. Protection against VSWR ..... 14
2.4.3. Protection against high temperature ..... 14
2.4.4. Protections incorporated into the PSU ..... 14
**3. TECHNICAL SPECIFICATIONS ..... 15**
3.1. RF section ..... 15
3.2. Composite operation ..... 15
3.3. Stereo operation ..... 15
3.4. Mono operation ..... 15
3.5. AF inputs ..... 16
3.6. HF output ..... 16
3.7. Power supply ..... 16
3.8. Interface panel ..... 17
3.9. Environmental ..... 17
3.10. Physical ..... 17
3.11. Miscellaneous ..... 17
**4. STARTING UP YOUR TRANSMITTER ..... 18**
4.1. Connecting the transmitter ..... 18
4.2. Using the front panel ..... 20
4.2.1. Setting the transmitter ..... 20
4.2.2. Input selection ..... 21
4.2.3. Setting the MPX inputs ..... 22
4.2.4. MPX configuration ..... 23
4.2.5. Setting the analog or AES inputs ..... 24
4.2.6. Getting on air ..... 24
4.3. Using the PC application ..... 25
4.3.1. Connecting with the control software application ..... 25
4.3.2. Setting the transmitter ..... 25
4.3.3. Input selection ..... 25
4.3.4. Setting the MPX inputs ..... 26
4.3.5. MPX configuration ..... 26


Crown Broadcast, a division of International Radio & Electronics Corporation 25166 Leer Drive, Elkhart, Indiana, 46514-5425 USA
Ph +1 (574) 262 8900

4.3.6. Setting the analog or AES inputs ... 26
4.3.7. Getting on air ... 26
4.4. With the TCP/IP option ... 27
4.4.1. Network configuration ... 27
4.4.2. Connecting to the web interface ... 27
4.4.3. Configuring the transmitter ... 28
4.4.4. Getting on air ... 28

**5. FRONT SCREEN USE ... 29**

5.1. Overview ... 29
5.2. Working principle ... 29
5.3. Structure of the menus ... 31
5.3.1. Overview ... 31
5.3.2. First level measurements ... 32
5.3.3. First level menus ... 33
5.3.4. 5.3.4 TX Parameters menu ... 34
5.3.5. ALARMS menu ... 34
5.3.6. Input Switch menu ... 35
5.3.7. Line1 menu ... 36
5.3.8. MPX In menu ... 37
5.3.9. Audio Gene menu ... 38
5.3.10. Modulation menu ... 39
5.3.11. Stereo encoder menu ... 40
5.3.12. RDS / SCA encoder menu ... 41
5.3.13. FME limiter menu ... 42
5.3.14. RDS menu ... 43
5.3.15. Network menu ... 44
5.3.16. COM menu ... 45
5.3.17. Power supply menu ... 46
5.3.18. Temp/Fan menu ... 47
5.3.19. Time/Date menu ... 48
5.3.20. License menu ... 49
5.3.21. About / System menu ... 50
5.3.22. Easy/Expert menu ... 51
5.3.23. Exit menu ... 51
5.4. Main parameters description ... 52
5.4.1. TX Parameters menu ... 52
5.4.2. Input Switch menu ... 52
5.4.3. Line1 menu (ANA) ... 53
5.4.4. Line2 menu (AES) ... 55
5.4.5. MPX In menu ... 55
5.4.6. Player menu ... 56
5.4.7. Audio Gene menu ... 56
5.4.8. Modulation menu ... 57
5.4.9. Stereo Encoder menu ... 59
5.4.10. RDS / SCA Encoder menu ... 60
5.4.11. FME Limiter menu ... 60
5.4.12. RDS menu ... 62

**6. SERIAL & TELNET COMMANDS ... 67**

6.1. Working principle ... 67



Crown Broadcast, a division of International Radio & Electronics Corporation 25166 Leer Drive, Elkhart, Indiana, 46514-5425 USA
Ph +1 (574) 262 8900

6.2. Serial commands ... 68
6.2.1. System commands ... 68
6.2.2. Measurement commands ... 70
6.2.3. Configuration commands ... 71
6.2.4. Transmitter commands ... 72
6.2.5. Alarm commands ... 73
6.2.6. Input commands ... 73
6.2.7. Encoder commands ... 76
6.2.8. RDS commands ... 76
6.2.9. Status commands ... 81
6.2.10. Communication board commands ... 81

**7. CONFIGURATION WITH THE PC APPLICATION ... 82**

7.1. Overview ... 82
7.2. Using the application ... 82
7.2.1. Connection ... 82
7.2.2. Configuration ... 84
7.2.3. Saving parameters ... 90

**8. REMOTE CONTROL AND MONITORING WITH THE GPIO BOARD ... 91**

8.1. Introduction ... 91
8.2. Standard GPIO board ... 91
8.2.1. Description of control and monitoring functions ... 91
8.2.2. Remote control function pinout ... 92
8.2.3. Remote monitoring function pinout ... 92
8.2.4. Physical representation of the GPIOs ... 93
8.2.5. Management using serial commands ... 94
8.2.6. Management using serial commands ... 96

**9. THE EMBEDDED WEBSITE ... 97**

9.1. Introduction ... 97
9.2. Connecting to the embedded web site ... 97
9.3. Viewing the Status ... 100
9.3.1. Advanced measurements ... 100
9.3.2. Main status ... 104
9.4. Transmitter configuration ... 105
9.4.1. Easy configuration ... 105
9.4.2. Main configuration ... 106
9.4.3. Modulation configuration ... 107
9.4.4. Input Selection ... 109
9.4.5. Input Sources ... 110
9.5. Setting the RDS data ... 112
9.5.1. Basic encoder ... 112
9.5.2. Advanced Encoder ... 114
9.6. System configuration ... 118
9.6.1. Product ID ... 118
9.6.2. Date / Time ... 119
9.6.3. Network ... 120
9.6.4. Communication ... 120
9.6.5. Users ... 121
9.6.6. SNMP Agent ... 122
9.6.7. Notifications ... 123



Crown Broadcast, a division of International Radio & Electronics Corporation 25166 Leer Drive, Elkhart, Indiana, 46514-5425 USA
Ph +1 (574) 262 8900

9.6.8. Common traps ..... 124
9.6.9. IRT Traps ..... 124
9.6.10. Crown Broadcast Traps ..... 125
9.6.11. Support ..... 125
9.6.12. EMR ..... 126
9.7. About ..... 126

**10. SERVICE AND SUPPORT ..... 127**

10.1. Service ..... 127
10.2. 24–Hour Support ..... 127
10.3. Spare Parts ..... 127
10.4. Factory Service Instructions ..... **Error! Bookmark not defined.**

**11. CROWN BROADCAST THREE YEAR LIMITED PRODUCT WARRANTY ..... 128**

**APPENDIX A: SOFTWARE OPTION MANAGEMENT ..... 130**

A.1. Using the front panel application ..... 130
A.2. Using the PC application ..... 131
A.3. Using serial commands ..... 132

**APPENDIX B: ADJUSTING THE IMPEDANCE OF ANALOG INPUTS ..... 133**

**APPENDIX C: MAINTENANCE ..... 134**

C.1. Changing the fuses ..... 134
C.2. Changing the surge protector ..... 134

**APPENDIX D: TROUBLESHOOTING ..... 135**

D.1. Calibration ..... 135
D.2. Complete Reset of the Crown Broadcast FME ..... 135

**FOR MORE INFORMATION ..... 136**



Crown Broadcast, a division of International Radio & Electronics Corporation 25166 Leer Drive, Elkhart, Indiana, 46514-5425 USA
Ph +1 (574) 262 8900

# 1. INTRODUCTION

## 1.1. Crown Broadcast History

Crown Broadcast is a division of International Radio & Electronics Corporation located in Elkhart, Indiana. Crown began as International Radio and Electronics Corporation in 1947. The founder's intent was to provide high-quality audio equipment and transmitter products to the broadcasting industry.

In the following decades, the company evolved into a world-class supplier of professional audio equipment and, later, of industrial power supplies and medical imaging power systems. The name of the company was changed to Crown International in 1975.

In 2000, Crown International was purchased by Harman International, primarily for Crown's Pro Audio division. As the Crown Broadcast division was not central to the vision of Harman International, remaining members of Crown's founding family secured the Broadcast division as a separate entity and brought it under the newly resurrected corporate name of International Radio & Electronics Corporation (IREC).

Today, Crown Broadcast continues to fulfill its mission to provide Best-in-Class FM broadcast transmitter equipment to its customers by providing highly robust and reliable transmitters worldwide. Crown Broadcast and WorldCast Systems entered into an agreement allowing Crown Broadcast to add WorldCast's Ecreso line of transmitters for distribution, service and support domestically. We believe this will allow our valued customers the ability to select from a very diverse and fully featured line up including our current product, now called the Classic line, and the new "E" Series products which will meet all customers' needs in power levels up to 10kW's.


Crown Broadcast, a division of International Radio & Electronics Corporation 25166 Leer Drive, Elkhart, Indiana, 46514-5425 USA
Ph +1 (574) 262 8900

## 1.2. Before you start

This equipment complies with international mechanical and electrical standards. To maintain this compliance, as well as to ensure proper and safe working conditions and avoid electrical shocks and fire hazards, you must comply with the following recommendations:

- The device should only be utilized in the conditions described in the user manual.
- The device is designed for industrial usage and must only be operated by qualified personnel.
- The device may be heavy; it must be lifted and handled with care, specifically during unpacking and set up.

**Electrical precautions**

- Unplug from mains outlet before any intervention.
- Any maintenance, adjustment or repair must be carried out by personnel specifically trained by WorldCast Systems.
- Before switching on the device, make sure the nominal voltage specified on the device matches the mains nominal voltage.
- The device should only be operated on a stable electrical network. If the electrical network is not stable, a power conditioner, such as a UPS, must be used.
- The device must only be used with a plug that incorporates a protective ground contact.
- To avoid any risk of electrocution, the protection conductor must not be cut, intentionally or accidentally, either on the device or on the power cord.
- High quality shielded cables are mandatory.

**Environmental precautions**

- It is necessary to verify that environmental conditions comply with those recommended in the manual.
- Nothing must obstruct the ventilation.
- To avoid any electromagnetic interference, the device must only be used when it is closed, installed in a cabinet and connected to the earth ground as per the instructions.
- The device should not be exposed to dripping or splashing and no objects filled with liquids, such as coffee cups, should be placed on the equipment.
- Connectors may be hot on high power units.

**Precautions regarding the lithium battery**

This device includes a lithium battery.

If the battery is not correctly replaced, there is a risk of explosion.

Only replace it with a battery of the same type. Contact Crown Broadcast before attempting to use another type.

- Do not puncture the battery
- Do not throw the battery in fire
- Do not immerse the battery in water
- Do not throw away the used battery, recycle it instead. You may send it back to us if needed.

***If these precautions are not followed, the guarantee will be void.***


Crown Broadcast, a division of International Radio & Electronics Corporation 25166 Leer Drive, Elkhart, Indiana, 46514-5425 USA
Ph +1 (574) 262 8900

# 2. DESCRIPTION

## 2.1. General description

Combining the very latest technologies with our proven RF experience, our 20 W and 100 W exciters have been designed to offer an innovative and highly reliable solution.

Among the first FM transmitters based on 6th Generation MOSFET, these transmitters are not only more robust, they also deliver efficiency of up to 74%. Top signal quality and performance are achieved thanks to the "FM Band Direct to Frequency" digital modulator which is at the heart of this range.

The manufacturing quality and the simplicity of use make these truly powerful transmitters to broadcast analog FM programs.

The Crown Broadcast FME 20 W and the Crown Broadcast FME 100 W are fully protected against overheating and VSWR.

They also offer a number of built-in functions that can eliminate the additional cost and space requirements of external equipment.

Fully featured for local maintenance and configuration, they also allow full remote control by Web server, SNMP, RS232, or GPIOs*.

* Options available with the current version are:

- Basic RDS: The internal RDS encoder makes it possible to manage basic RDS parameters (PI, PS, TP, TA, PTY, MS, DI, radiotext, PTYN, group sequence, AF, 1 PSN, 2 DSN, dynamic scrolling PS).
- GPIO: This additional board allows remote control and management of your transmitter.
- TCP/IP: This additional board allows remote configuration via a web site and SNMP management.

*Please refer to Appendix A for more information on option management.*

*Project co-financed by the European Union, involved in the Aquitaine Area, through the European Funds for local development.*

## 2.2. Accessories

The Crown Broadcast FME is supplied with:

- 1 power cable
- 1 serial cable
- 1 USB cable
- 2 2A fuses
- 1 interlock plug + locks
- 1 box including 1 CD (documentation + PC application) and 1 quick start notice.


Crown Broadcast, a division of International Radio & Electronics Corporation 25166 Leer Drive, Elkhart, Indiana, 46514-5425 USA
Ph +1 (574) 262 8900

## 2.3. Crown Broadcast FME 20/100 W Description

### 2.3.1. Front panel

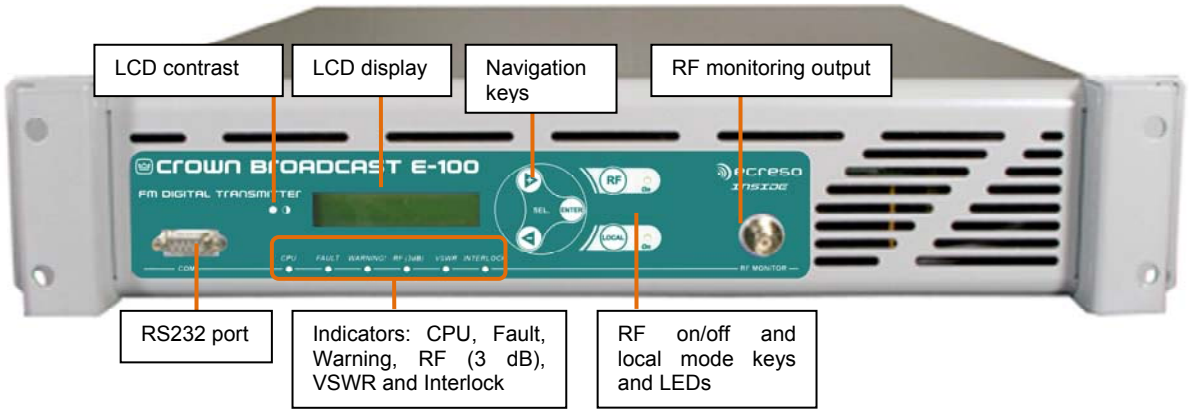


**Description of indicator LEDs:**

- CPU: Blinks to indicate CPU activity
- FAULT: Major fault of the unit (RF / VSWR protection, temperature, …)
- WARNING: Minor fault of the unit (ambient temperature, radiator temperature, fan, current, voltage, loss of signal)
- VSWR: VSWR of the unit
- RF (3dB) : 3 dB of the unit
- INTERLOCK: Indicates that internal or external safety links are not activated

- RF: Indicates that the unit is on RF=ON. Associated to the RF button.
- LOCAL: Indicates that the unit is in local mode. Associated to the Local button.

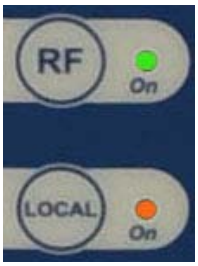



Crown Broadcast, a division of International Radio & Electronics Corporation 25166 Leer Drive, Elkhart, Indiana, 46514-5425 USA
Ph +1 (574) 262 8900

### 2.3.2. Rear panel

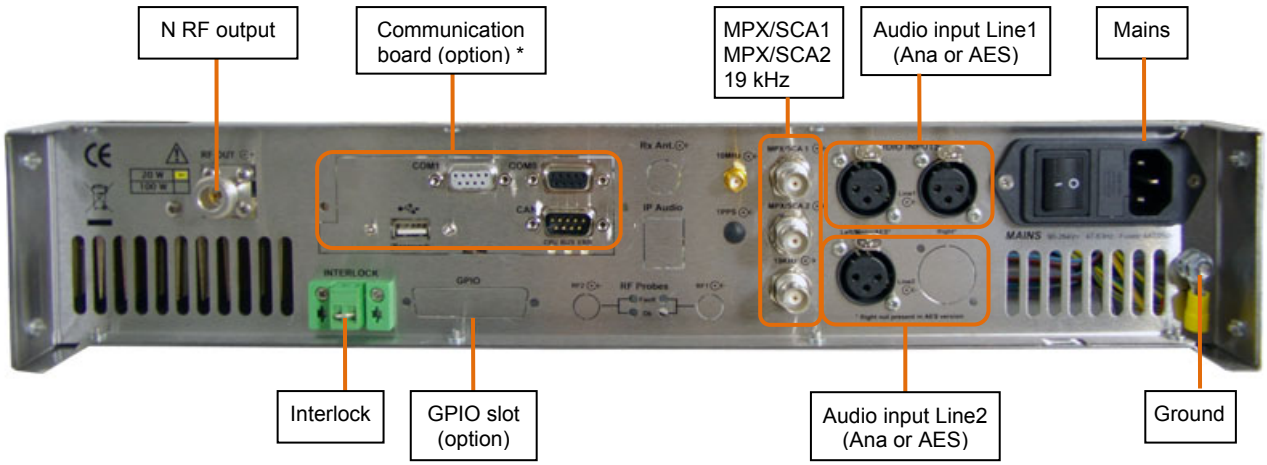


* Two optional communication boards are available:

TCP/IP board

- 2 RS232 ports (COM1 and COM2)
- 1 µSD card
- 1 USB port
- 1 Ethernet port
- 1 CAN port

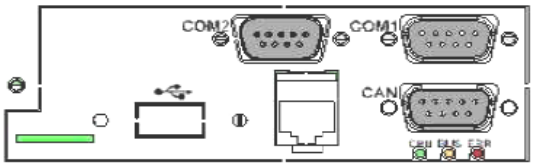


On the TCP/IP board, the COM1 port is used to send serial commands and the COM2 port is used for dynamic PS tags.

CAN board

- 2 RS232 ports (COM0 and COM1)
- 1 slave USB port
- 1 CAN port

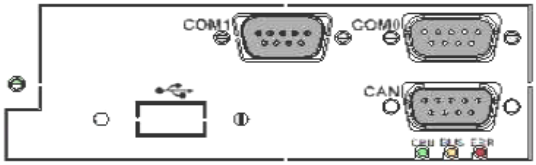


On the CAN board, the COM0 port is reserved for the unit's upgrade and the COM1 port is used to send serial commands.


Crown Broadcast, a division of International Radio & Electronics Corporation 25166 Leer Drive, Elkhart, Indiana, 46514-5425 USA
Ph +1 (574) 262 8900

### 2.3.3. Opened cover

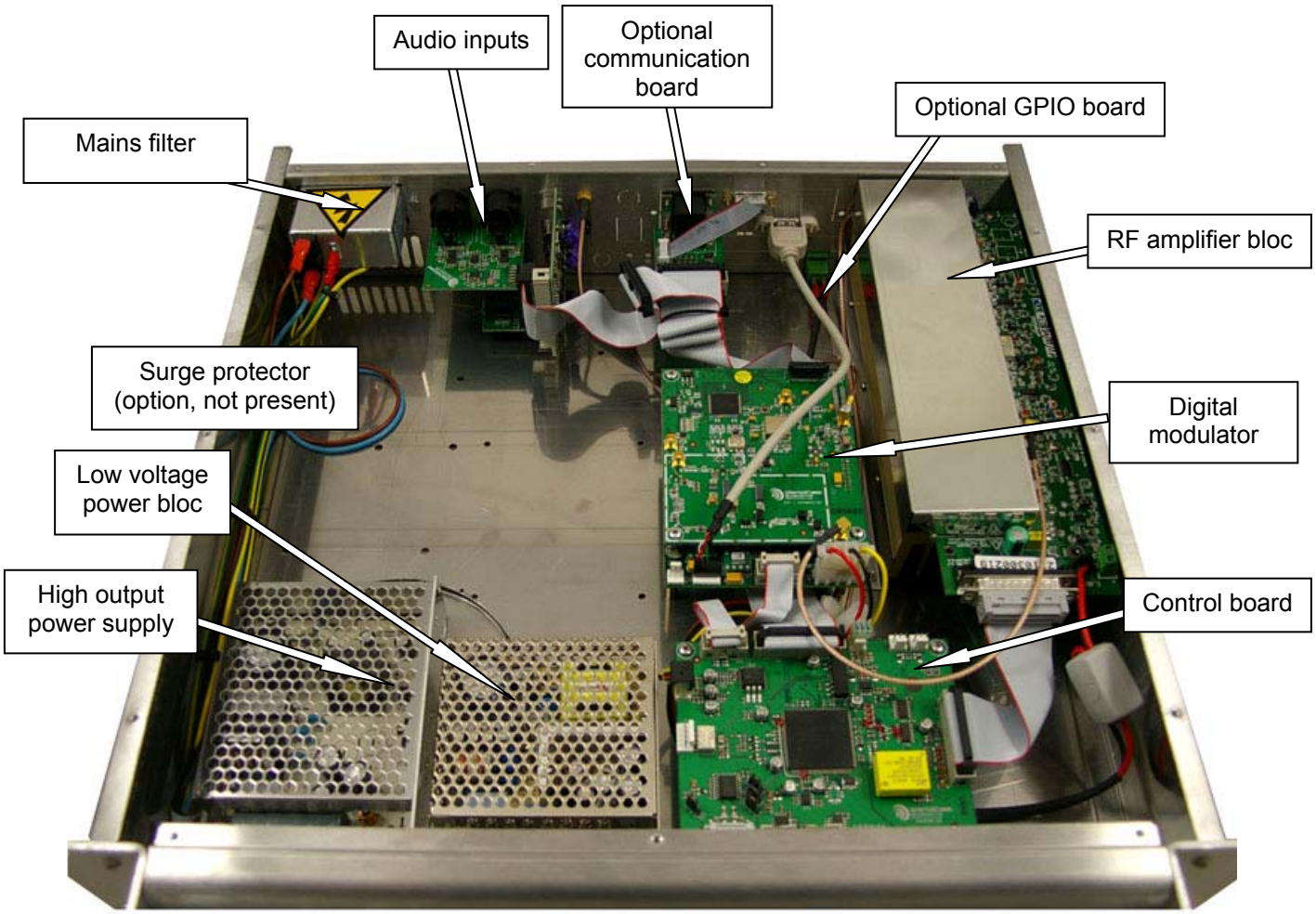



Crown Broadcast, a division of International Radio & Electronics Corporation 25166 Leer Drive, Elkhart, Indiana, 46514-5425 USA
Ph +1 (574) 262 8900

### 2.3.4. Synoptic

Crown Broadcast FME 20/100 W

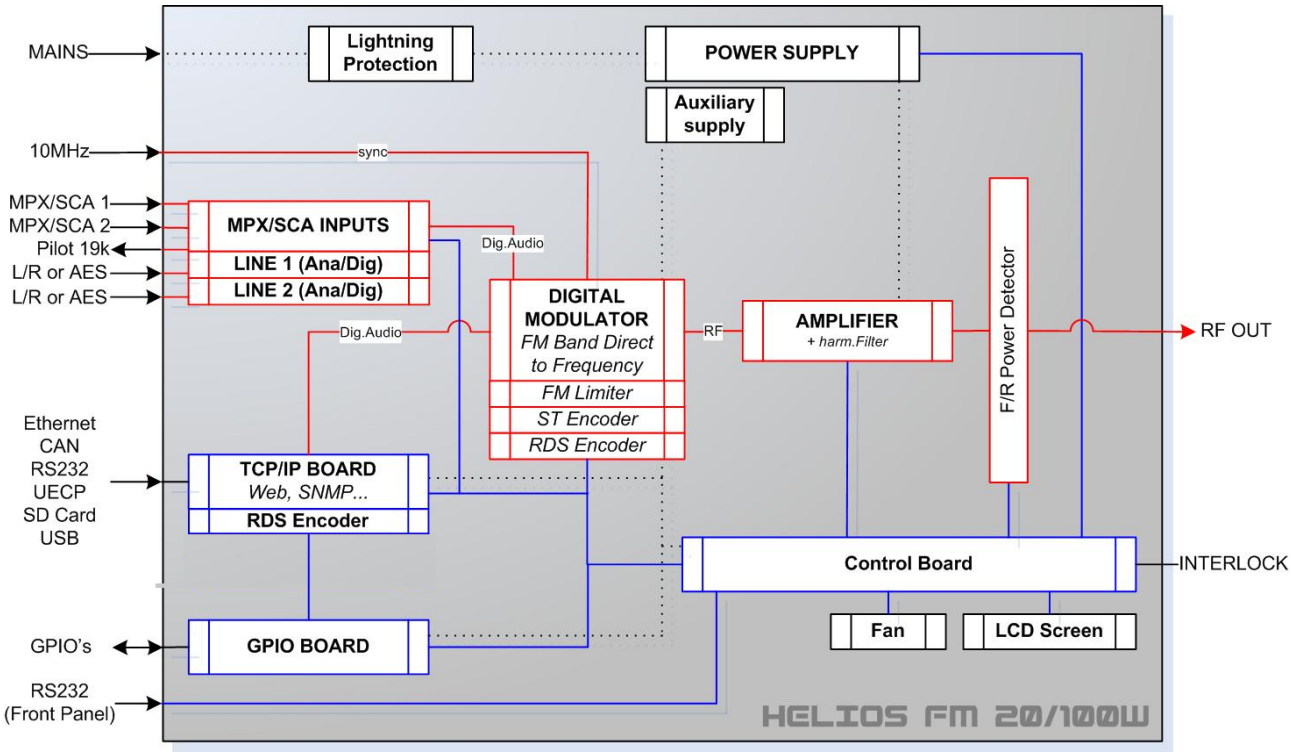


Audio


Crown Broadcast, a division of International Radio & Electronics Corporation 25166 Leer Drive, Elkhart, Indiana, 46514-5425 USA
Ph +1 (574) 262 8900

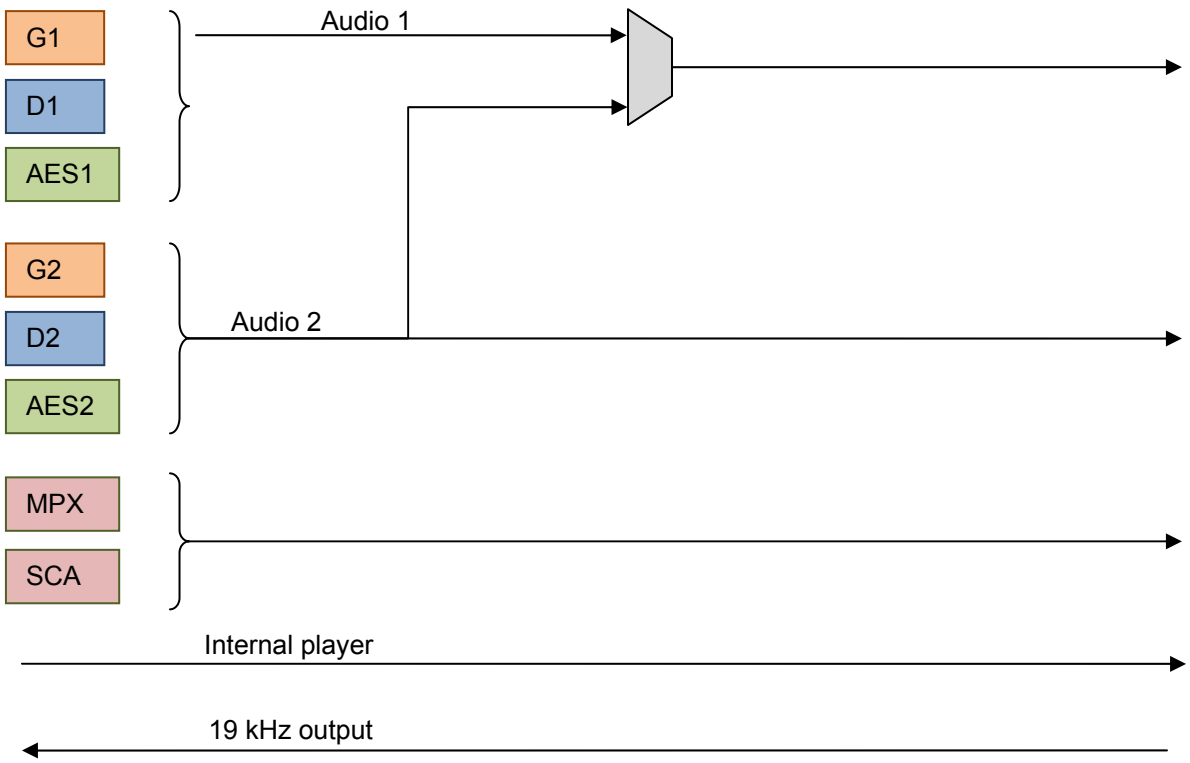


### 2.3.5. 2U Rack

The choice of stainless steel as material guarantees against corrosion. The rack structure and the structure of the monoblock front panel reinforce the device. The rectangular outline of the front panel has an LCD display. The transport handles are mechanically interchangeable and can be removed. The cover is fixed by a set of M3 POZIDRIV screws and can be easily removed. The user has access to every module to set the parameters of the device.

## 2.4. Protecting the transmitter

To ensure the transmitter will work with no risk of damage, a series of protections has been set.

### 2.4.1. Surge Protector

An optional surge protector module can be added to the chassis. The goal of this module is to limit the surge caused by lightning. It works after the main protector usually located in the electrical board and before the power supply protector thus offering an optimal level of protection. The protector principle is to capture the surge and divert it to the ground so as to protect the transmitter and its power supplies.

The surge protector used by Crown Broadcast includes multi-MOV technology and a gas discharge tube (GDT) giving a very high protection and very low parasitic capacitance and leakage currents.

Please refer to Appendix B ‘Maintenance’ for the procedure to replace the surge protection module.

### 2.4.2. Protection against VSWR

Several systems coexist to offer the optimal protection against VSWR:

- Hardware protection:
  In case of open circuit or short-circuit, the RF is cut. When the situation returns to normal, it is automatically reset.
- Software protection:
  The reflected power is limited to 3 W for Crown Broadcast FME 20 W, to 10 W for Crown Broadcast FME 100 W, to 40 W for Crown Broadcast FME 350 W / 750 W / 1000 W and to 80 W for Crown Broadcast FME 1500 W / 2000 W
- Software settings for the reflected power security management (see VSWR Trip, section 5.4.1).

### 2.4.3. Protection against high temperature

The Power Supply module includes its own protector against high temperature. The protector cuts off the power supply output voltage if the temperature is abnormally high. When the situation returns to normal, it is automatically reset. The temperature threshold value varies depending on the PSU.

The ambient temperature and the radiator temperature are monitored.

- The max ambient temperature is set by software (see menu Temp/Fan, section 5.3.18). Default value is 50°C. In case of overshoot, a Warning alarm is triggered (Alarm Amb).
- The max radiator temperature is set by serial command (see serial command CONF.HEAT.MAX, section 6.2.3). Default value is 65°C. In case of overshoot, a Warning alarm is triggered (Alarm Heat).
- The max internal temperature is set at 70°C. If the temperature exceeds 70°C, the RF is cut off and a fault alarm is triggered (Alarm Temp).

### 2.4.4. Protections incorporated into the PSU

The main power supply voltage and the auxiliary power supply voltage are monitored as follows:

- Main power supply:
  If the difference between the measured voltage and the expected voltage is greater than 10%, a Warning alarm is triggered (Alarm Volt1). Expected voltage is automatically computed.
- Auxiliary power supply:
  Voltage should be either 5, 12 or -12 V. If the difference between the measured voltage and the nominal voltage is greater than 10%, a Warning alarm is triggered (Alarm Volt Aux).

The amperage is also measured. The threshold varies depending of the power of the Crown Broadcast FME: 2 A for the Crown Broadcast FME 20 W, 8.5 A for the Crown Broadcast FME 100 W, 20 A for the Crown Broadcast FME 350 W, 23 A for the Crown Broadcast FME 750 W, 29 A for the Crown Broadcast FME 1000 W, 26 A per amplifier pallet for the Crown Broadcast FME 1500 W, 31 A per amplifier pallet for the Crown Broadcast FME 2000 W. In case of overshoot, a Warning alarm is triggered (Alarm Cur) and the nominal power is reduced.


Crown Broadcast, a division of International Radio & Electronics Corporation 25166 Leer Drive, Elkhart, Indiana, 46514-5425 USA
Ph +1 (574) 262 8900

# 3. TECHNICAL SPECIFICATIONS

## 3.1. RF section

| | |
|---|---|
| Frequency range | 87.5 to 108 MHz |
| Summary of different steps | 10 kHz |
| Frequency stability | < $10^{-6}$ per year |
| Power range | 0-20 W or 0-100 W @ ROS=1.35 |
| Power output | Continuously 0-20 W or 0-100 W |
| Spurious and harmonic suppression | > 75 dBc |
| 10 MHz input recommended range | -10 dBm to +10 dBm |

## 3.2. Composite operation

| | |
|---|---|
| Bandwidth | > 40 Hz to 53 kHz @ 0.1 dB |
| | > 20 Hz to 60 kHz @ 0.2 dB |
| | > 60 kHz to 80 kHz @ 0.4 dB |
| Intermodulation distortion | < 0.05% |
| FM S/N ratio | > 80 dB RMS @ 75 kHz deviation |
| AM noise | < 0.1% (50 dB) RMS (20-20 000 Hz) |

## 3.3. Stereo operation

| | |
|---|---|
| Bandwidth | > 20 Hz to 15 kHz @ 0.1 dB |
| 38 kHz discontinuance | > 50 dB |
| Stereophonic crosstalk | > 50 dB |
| Pre-emphasis | 0 µs, 50 µs or 75 µs |

## 3.4. Mono operation

| | |
|---|---|
| Bandwidth | > 40 Hz to 15 kHz @ 0.1 dB |
| Out of band rejection | > 40 dB @ 19 kHz |
| Pre-emphasis | 0 µs, 50 µs or 75 µs |


Crown Broadcast, a division of International Radio & Electronics Corporation 25166 Leer Drive, Elkhart, Indiana, 46514-5425 USA
Ph +1 (574) 262 8900

## 3.5. AF inputs

*Analog* (LINE1)

| | |
|---|---|
| Connector | "XLR" type |
| Impedance | > 10 kΩ by default, adjustable to 600 Ω by jumpers, balanced |
| Bandwidth | Software adjustable |
| Level | Software adjustable (-18/+18 dBu range) |

*AES* (LINE2)

| | |
|---|---|
| Connector | "XLR" type |
| Impedance | > 110 Ω balanced |
| Bandwidth | Software adjustable |
| Level | Software adjustable (-20 to 0 dBFS range) |
| Sampling rate | Auto adjusted up to 192 kHz |
| Bit | 16, 24, 32 |

*Multiplex (MPX/SCA)*

| | |
|---|---|
| Connector | "BNC" type |
| Impedance | > 5 kΩ unbalanced |
| Level | Software adjustable (-18/+18 dBu range) |

## 3.6. HF output

| | |
|---|---|
| Connector | N type |
| Impedance | 50 Ω |

*Monitoring (RF Monitor)*

| | |
|---|---|
| Level | 10 dBm @ 100 W at main output |

## 3.7. Power supply

| | |
|---|---|
| Voltage | 90 VAC to 264 VAC |
| Frequency | 47 Hz - 63 Hz |
| Max consumption | 300 W @ nominal power |


Crown Broadcast, a division of International Radio & Electronics Corporation 25166 Leer Drive, Elkhart, Indiana, 46514-5425 USA
Ph +1 (574) 262 8900

## 3.8. Interface panel

| | |
|---|---|
| Indicators | Green LED: CPU activity |
| | Red LED: major fault |
| | Yellow LED: minor fault |
| | Red LED: RF fault (3 dB) |
| | Red LED: VSWR fault |
| | Green LED: safety interlock |
| | Green LED: RF on |
| | Orange LED: local mode |
| Screens | Back lighted LCD: displays operating parameters and menus. |
| Buttons | RF, local, +, -- and OK |

## 3.9. Environmental

| | |
|---|---|
| Nominal operating temperature | 5°C to 45°C |
| Maximum operating temperature | 0°C to 50°C |
| Warehousing temperature | -20°C to +70°C |
| Warehousing time | < 10 years |
| Cooling | Internal ventilation (2 x~1.6 l/s) |

## 3.10. Physical

*Crown Broadcast FME 20/100 W*

| | |
|---|---|
| Overall dimension | 19'' (482.6 mm) X 2U (89 mm) X 470 mm |
| Rack size without front panel | 440.4 X 82 X 466.5 mm (WxHxD) |
| Enclosure depth required | 600 mm |
| Mounting | 19''enclosure, with 4 M6X12 screws |
| Weight | around 6.5 kg |

## 3.11. Miscellaneous

| | |
|---|---|
| Marking | CE |
| Standards | 1999/5/CE (R&TTE) |
| | ETS 302 018 (EMC) |
| | ETS 300 384 (Radio) |
| | NF EN 60215 (Safety) |

*Typical performances unless otherwise noted*


Crown Broadcast, a division of International Radio & Electronics Corporation 25166 Leer Drive, Elkhart, Indiana, 46514-5425 USA
Ph +1 (574) 262 8900

# 4. STARTING UP YOUR TRANSMITTER

## 4.1. Connecting the transmitter

** Secure the interlock plug if needed:*

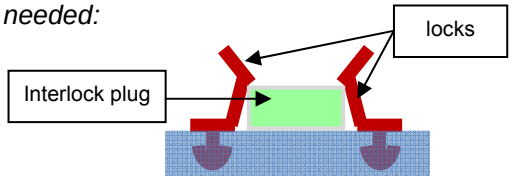


1. Make sure the interlock plug present on the rear panel; secure it using the provided locks if needed.

2. Connect the transmitter RF output to a 50 Ω load with a wattmeter.
   The 50 Ω charge power must be greater than 30 W for a 20 W transmitter and greater than 150 W for a 100 W transmitter.

   When you acquired your transmitter, the RF amplifier is deactivated and power is set to 0 W. These settings can be adjusted using the PC application, the front panel application or serial commands.

3. Connect the audio or MPX inputs.

4. To use the PC application or the serial commands, connect a PC to the serial port on the front panel of the Crown Broadcast transmitter.
   If your PC does not have a RS-232 port, use a USB/RS-232 cable.

5. Connect to power using the provided cable; you may unscrew the cable loop and pass the power cable through it to secure it.

6. Press the Local button on the front panel, then the RF button.


Crown Broadcast, a division of International Radio & Electronics Corporation 25166 Leer Drive, Elkhart, Indiana, 46514-5425 USA
Ph +1 (574) 262 8900

**To configure the transmitter using the front panel:** See section 4.2.

**To configure the transmitter using the PC application:** See section 4.3.

**To set network parameters** (TCP/IO option only)**:** See section 4.4.

**To use serial commands:** See section 6.



Crown Broadcast, a division of International Radio & Electronics Corporation 25166 Leer Drive, Elkhart, Indiana, 46514-5425 USA
Ph +1 (574) 262 8900

## 4.2. Using the front panel

Please refer to section 5.2 for front panel working principle.

### 4.2.1. Setting the transmitter

Set the power (in W), the frequency (in MHz) and enable the RF:

```
  98.00MHz          0W
```

From the main screen, press the "Enter" key to display menus and then the "+" key until you see the TX Parameters menu.

```
  98.00MHz          0W
-> TX  PARAMETERS >
```

Once you see this screen, press "Enter".

```
1      FREQ      PFWD
   ->  98.00         0
```

You may now set the frequency and the power. The arrow preceding the frequency indicates that this parameter is selected. Press "Enter" to switch to edit mode.

```
1      FREQ      PFWD
   ->  98.00         0
```

Using the "+" and "–" keys, adjust the frequency starting with the last digit. Once you've reached the desired value, press "Enter" to go to the next digit. Follow the same procedure for all digits and confirm with the "Enter" key. Use the "+" to go the next parameter.

```
1      FREQ      PFWD
     104.05     ->   0
```

The arrow now appears before the power. Set the power in the same way you set the frequency.

After confirming the power value with the "Enter" key, enable the RF using the front panel button.

```
1        GO  TO
      MAIN    -> RF
```

Press the "+" key until you see this screen. When the RF menu is selected, press "Enter" to return to the list of menus.



Crown Broadcast, a division of International Radio & Electronics Corporation 25166 Leer Drive, Elkhart, Indiana, 46514-5425 USA
Ph +1 (574) 262 8900

### 4.2.2. Input selection

```
        G O   T O
 -> I N P U T   S W I T C H >
```

Press the “+” key until you see the Input Select menu. Then press the “Enter” key.

```
1   I N P U T   S E L E C T
      -> M O D E : M A N U
```

Browse through the Input Select menu using the “+” and “–” keys to switch to manual mode.

```
1   I N P U T   S E L E C T
      -> M A I N : L I N E 1
```

Select the current input:

- "LINE1" for analog (see sections 9 to 11)
- "LINE2" for AES (see sections 9 to 11)
- "MPX1" for MPX (see sections 8 and 11)
- "MPX2" for MPX (see sections 8 and 11)
- "PLAYER": internal generator

*Use the “Enter” key to switch to edit mode, the “+” and “–” keys to adjust values and the “Enter” key to confirm.*

```
1       G O   T O
  M A I N   -> I N P U T   S E L
```

Press the “+” key until you see this screen. When the Input Sel menu is selected, press “Enter” to return to the list of menus.


Crown Broadcast, a division of International Radio & Electronics Corporation 25166 Leer Drive, Elkhart, Indiana, 46514-5425 USA
Ph +1 (574) 262 8900

### 4.2.3. Setting the MPX inputs

```
          G O   T O
     -> M P X   I N >
```

Press the “+” key until you see the MPX IN menu. Then press the “Enter” key.

```
1         M P X   I N
         -> M P X 1 >
```

Press the “Enter” key once more to set the MPX1 input.

```
2  M P X - I N -> M P X 1
  -> L E V E L : + 0 6 . 0 0
```

Browse through the MPX1 menu using the “+” and “–” keys to set the nominal level between -50 and +50 dBu,

*Use the “Enter” key to switch to edit mode, the “+” and “–” keys to adjust values and the “Enter” key to confirm.*

```
2          G O   T O
  -> M P X - I N     M P X 1
```

Press the “+” key until you see this screen. When the MPX-IN menu is selected, press “Enter” to return to main MPX menu and set the MPX2 input in the same way.

```
1          G O   T O
  -> M A I N     M P X - I N
```

To return to the main screen, press the “+” key until you see this screen. When the Main menu is selected, press “Enter” to return to the list of menus.


Crown Broadcast, a division of International Radio & Electronics Corporation 25166 Leer Drive, Elkhart, Indiana, 46514-5425 USA
Ph +1 (574) 262 8900

### 4.2.4. MPX configuration

```
        G O   T O
-> S T   E N C O D E R >
```

Press the “+” key until you see the ST Encoder menu. Then press the “Enter” key.

```
1     S T   E N C O D E R
-> M O / S T : S T E R E O
```

Press once again the “Enter” key to set the audio type. Select what you need using “+” and “–” keys:

- STEREO
- MONO
- MONO_L
- MONO_R

Selecting STEREO enables the internal 19 kHz; you will therefore want to select MONO for an MPX input.

```
1         G O   T O
  M A I N     -> C O D E R
```

Confirm with the “Enter” key and press “+” until you see this screen. When the CODER menu is selected, press “Enter” to return to the list of menus.

```
        G O   T O
-> S T   E N C O D E R >
```

Press the “+” key until you see the Modulation menu.

```
        G O   T O
-> M O D U L A T I O N >
```

Then press the “Enter” key.

```
1   M O D U L A T I O N
-> D E V   M P X : 1 2 7 . 2
```

Browse through the Modulation menu using the “+” and “–” keys to set the total deviation between 0 and 150 kHz,

```
1   M O D U L A T I O N
-> D E V   P I L O T : 1 8 . 4
```

Set the pilot deviation between 0 and 25.5 kHz.

*For each of these values, use the “Enter” key to switch to edit mode, the “+” and “–” keys to adjust values and the “Enter” key to confirm.*

```
1         G O   T O
  M A I N -> M O D U L A T I O N
```

Press the “+” key until you see this screen. When the Modulation menu is selected, press “Enter” to return to the list of menus.


Crown Broadcast, a division of International Radio & Electronics Corporation 25166 Leer Drive, Elkhart, Indiana, 46514-5425 USA
Ph +1 (574) 262 8900

### 4.2.5. Setting the analog or AES inputs

```
          G O   T O
     -> L I N E 1 >
```

Press the “+” key until you see the Line1 (or Line2) menu. Then press the “Enter” key.

```
1         L I N E 1
  -> L E V E L : + 0 6 . 0 0
```

Browse through the Line1 (or Line2) menu using the “+” and “–” keys to set the nominal level between -50 and +50 dBu.

*Use the “Enter” key to switch to edit mode, the “+” and “–” keys to adjust values and the “Enter” key to confirm.*

```
1         G O   T O
    M A I N     -> L I N E 1
```

Press the “+” key until you see this screen. When the Line1 (or Line2) menu is selected, press “Enter” to return to the list of menus.

Default transmitter pre-accentuation is 50 µs. Depending on your country, you might need to switch it to 75 µs (in the United States, for instance). The pre-accentuation parameter is only visible in Expert mode; you must therefore first change the front panel working mode:

```
  9 8 . 0 0 M H z       1 0 0 W
          -> E A S Y
```

Press the “+” key until you see the Easy menu. Then press the “Enter” key, “+” and “Enter” again to switch to Expert mode.

```
          G O   T O
     -> L I N E 1 >
```

Go back to the Line1 menu. Press the "Enter" key and then the “+” key to change the pre-accentuation.

```
1         L I N E 1
      -> P R E A C : 5 0
```

*Use the “Enter” key to switch to edit mode, the “+” and “–” keys to adjust values and the “Enter” key to confirm.*

```
1         G O   T O
  -> M A I N     -> L I N E 1
```

Press the “+” key until you see this screen. When the Line1 (or Line2) menu is selected, press “Enter” to return to the list of menus.

### 4.2.6. Getting on air

1. Disable the RF using the front panel RF button.
2. Make sure the RF indicator LED is off.
3. Disconnect the load and connect the antenna to the transmitter RF output.
4. Enable the RF again using the front panel RF button.


Crown Broadcast, a division of International Radio & Electronics Corporation 25166 Leer Drive, Elkhart, Indiana, 46514-5425 USA
Ph +1 (574) 262 8900

## 4.3. Using the PC application

### 4.3.1. Connecting with the control software application

On the PC, start the control software. This is a set-up tool that will allow you to quickly set and test your transmitter. It is available on the supplied CD.

On the transmitter's page, click the control interface link to download the zipped file to your PC. Extract the .exe file. You do not need to install it; simply double-click on ENGI_REV_xxx.exe to launch the application.

Select the serial port connected to the Crown Broadcast transmitter and the port speed (9600 for the front panel connector).

### 4.3.2. Setting the transmitter

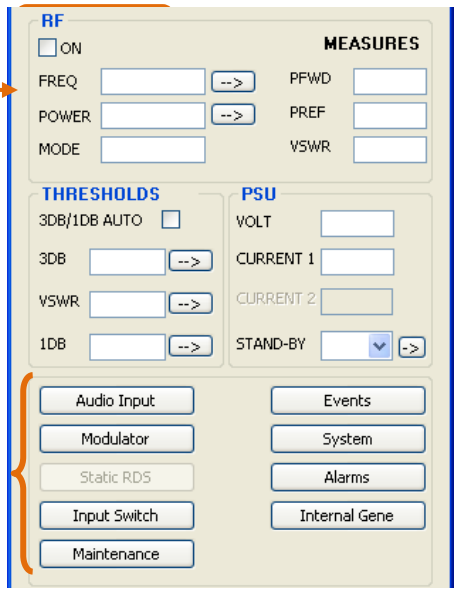


1. Set the power (in W), the frequency (in MHz) and enable the RF.

2. To send a parameter value to the transmitter, click the login button; no password is set in the factory. Click the --> button to the right of the text zone.

3. A set of buttons gives access to other parameters. Click on one of them to open a window displaying associated parameters. The "Audio Input" and "Modulator" windows will enable input and MPX configuration.

### 4.3.3. Input selection

The input can be set to:

- Line1 for the analog inputs (see sections 4.3.4 to 4.3.6)
- Line2 for the AES (see sections 4.3.4 to 4.3.6)
- MPX1 and MPX2 inputs (see sections 4.3.3 and 4.3.6)
- Internal generator


Crown Broadcast, a division of International Radio & Electronics Corporation 25166 Leer Drive, Elkhart, Indiana, 46514-5425 USA
Ph +1 (574) 262 8900

### 4.3.4. Setting the MPX inputs

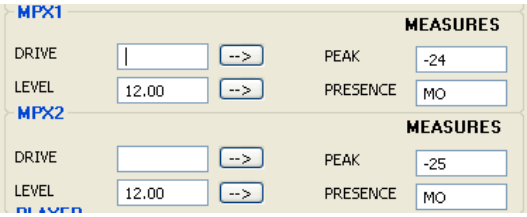


Click the "Audio Input" button:

- Set the nominal level between -50 and +50 dBu

### 4.3.5. MPX configuration

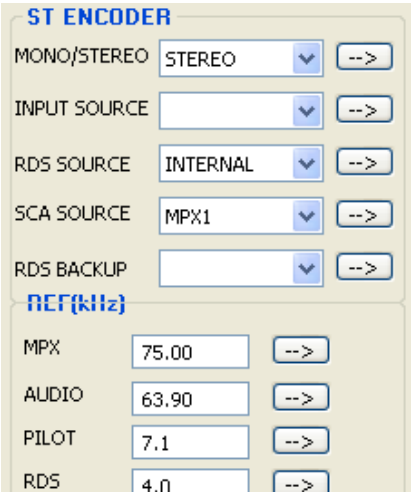


Click the "Modulator" button:

- Set the audio type to:
  - STEREO
  - MONO
  - MONO_L
  - MONO_R

  Selecting STEREO enables the internal 19 kHz; you should therefore select MONO for an MPX input.
- Set the total deviation between 0 and 150 kHz
- Set the pilot deviation between 0 and 25.5 kHz

### 4.3.6. Setting the analog or AES inputs

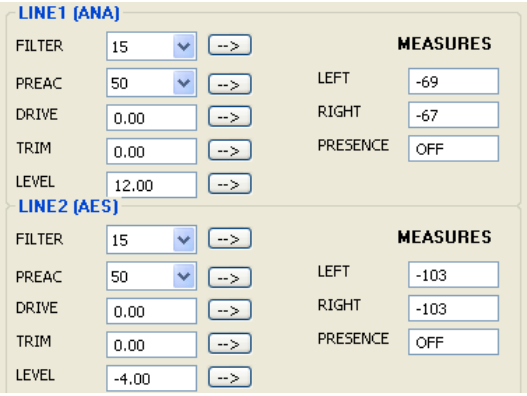


Click the "Audio Input" button:

- Set the nominal level between -50 and +50 dBu
- Set the pre-emphasis to 0, 50 or 75 µs depending on your country (50 µs in Europe, 75 µs in the USA).

### 4.3.7. Getting on air

1. Disable the RF using the front panel RF button.
2. Make sure the RF indicator LED is off.
3. Disconnect the load and connect the antenna to the transmitter RF output.
4. Enable the RF again using the front panel RF button.


Crown Broadcast, a division of International Radio & Electronics Corporation 25166 Leer Drive, Elkhart, Indiana, 46514-5425 USA
Ph +1 (574) 262 8900

## 4.4. With the TCP/IP option

### 4.4.1. Network configuration

If the optional IP board is present on the transmitter, first set the IP address with the front panel:

```
 98.00MHz          0W
```

From the main screen, press the "Enter" key to display menus and then the "+" key until you see the Network menu.

```
 98.00MHz        100W
    -> NETWORK >
```

Once you see this screen, press "Enter".

```
1  NETWORK -> ADR
-> 192.168.012.103
```

The IP address screen is displayed. Press "Enter" to switch to edit mode. Use the "+" and "–" keys to adjust values and the "Enter" key to confirm.

```
1  NETWORK -> MASK
-> 255.255.255.000
```

Press the "+" key to display the Netmask and modify it, if needed. Press the "Enter" key to confirm.

### 4.4.2. Connecting to the web interface

Now the transmitter is set. Connect it to the network.

Open a web browser (Google Chrome, Mozilla Firefox …) and enter in the address bar the transmitter's IP address such as it was set above.

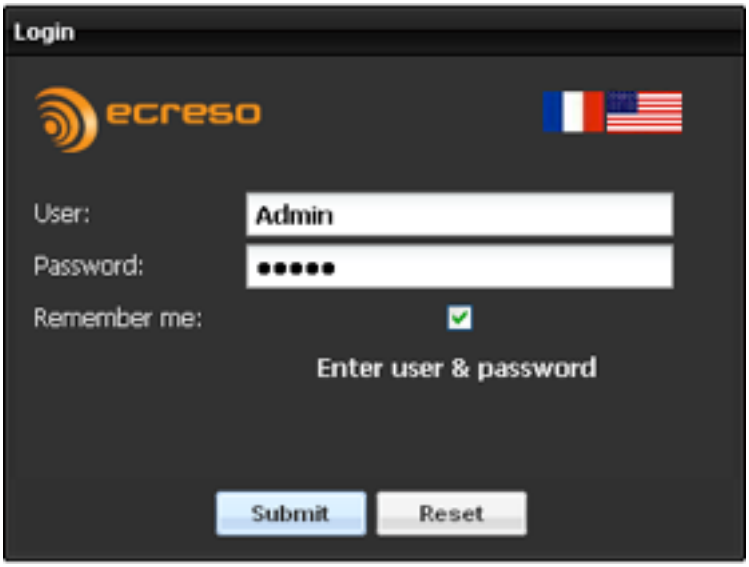


Select the language if necessary.

Enter the user name and password (default: **Admin** / **admin**).

You can now access the web interface.


Crown Broadcast, a division of International Radio & Electronics Corporation 25166 Leer Drive, Elkhart, Indiana, 46514-5425 USA
Ph +1 (574) 262 8900

### 4.4.3. Configuring the transmitter

Click the button

in the tool bar to access the transmitter configuration and display the 'Easy Config' page.

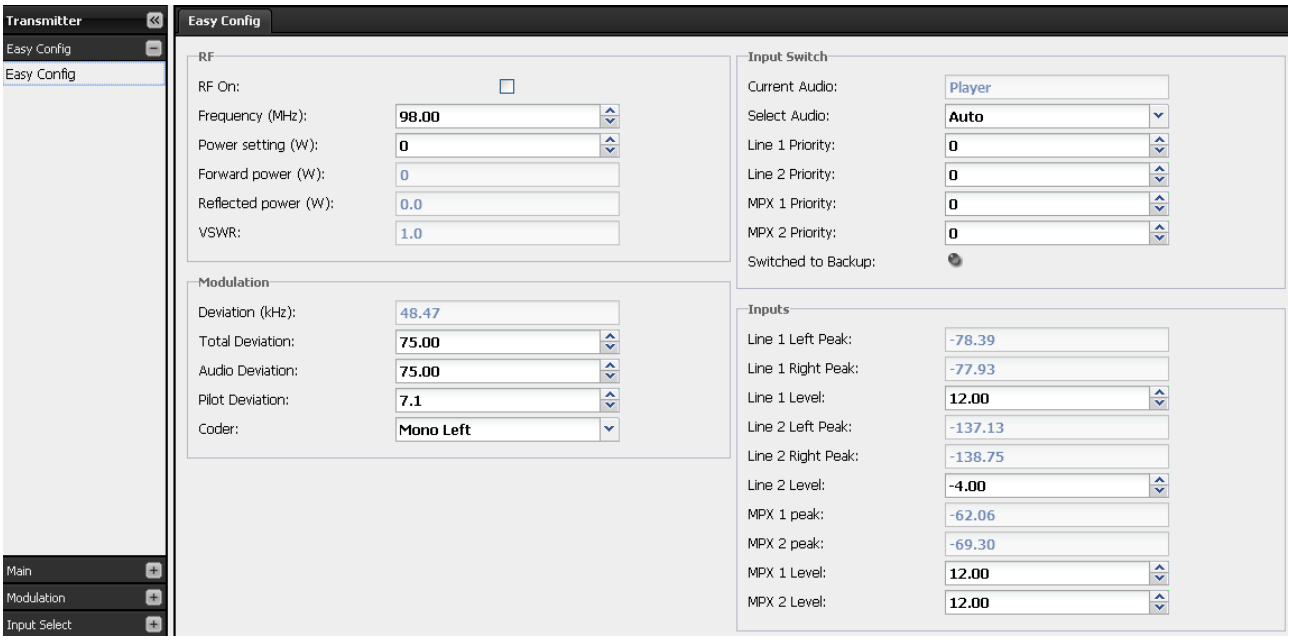


Basic configuration can be managed on this single page:

- Power, frequency and RF On
- Input priority setting
- MPX configuration
- Input configuration

Default transmitter pre-accentuation is 50 µs. Depending on your country, you might need to switch it to 75 µs (in the United States, for instance). The pre-accentuation parameter is available in the Input Source section.

### 4.4.4. Getting on air

1. Disable the RF using the front panel RF button.
2. Make sure the RF indicator LED is off.
3. Disconnect the load and connect the antenna to the transmitter RF output.
4. Enable the RF again using the front panel RF button.


Crown Broadcast, a division of International Radio & Electronics Corporation 25166 Leer Drive, Elkhart, Indiana, 46514-5425 USA
Ph +1 (574) 262 8900

# 5. FRONT SCREEN USE

## 5.1. Overview

The transmitter can be entirely set using the front panel application.

For audio configuration you will use the following menus:

- **Input Switch**: To select the main audio source and the secondary audio sources and to set switching criteria between these sources.
- **Line1 / Line2 / MPX1 / MPX2 / Audio Gene**: To set levels and processes for each source.
- **Modulation**: To set the deviation for each sub-carrier of the multiplex signal. In this menu you may also enable RDS and SCA.
- **Stereo Encoder**: To choose the content of stereo sub-carrier of the multiplex signal.
- **RDS/SCA Encoder**: To choose the content of the RDS and SCA sub-carrier of the multiplex signal.
- **RDS**: To set the RDS.

The default mode for the transmitter is the “Easy” mode; only menus required for basic configuration are available. For instance, the RDS menu mentioned above is not visible.

To display all menus, simply switch to “Expert” mode:

```
98.00MHz      100W
     -> EASY
```

From the main screen, press the “Enter” key to display the menu and press the “+” key until you see the Easy menu. Then press the “Enter” key, “+” and “Enter” again to switch to Expert mode.

On the menu representations section 5.3, “Easy” menus are in green and “Expert” menus are in orange.

ⓘ *On startup, the screen displays the name of the unit, its software release and its serial number.*

## 5.2. Working principle

Three keys allow you to browse through the menus: + − ENTER

With the + and − keys, go from one screen to the next or rather from one command to the next. If 2 commands are available on a single screen, press + twice to go to the next screen.

A command is selected when an arrow is visible before its name.

Example:

```
1      FREQ      PFWD
   ->  98.00      750
```

*The frequency is selected*

```
1      FREQ      PFWD
       98.00   -> 750
```

*The power is selected*



Crown Broadcast, a division of International Radio & Electronics Corporation 25166 Leer Drive, Elkhart, Indiana, 46514-5425 USA
Ph +1 (574) 262 8900

The + and − keys are also used to adjust values after the edit mode has been enabled.

To adjust a value, set each character at a time. Text values are set from left to right; number values are set from right to left.

The ENTER button is used to:

- Access a lower level menu
- Enable the edit mode for parameters that can be modified
- Confirm a new value
- Return to the higher level menu
- Return to the main screen when pressed for a few seconds

Some menus include sub-menus. To make it easier to browse through the menus and locate the information, a small number is visible on the top left of the screen; it gives you the level of the menu you are viewing (1 or 2).

If a text string is longer than the screen, press the ENTER key to access the text string and + to scroll.


Crown Broadcast, a division of International Radio & Electronics Corporation 25166 Leer Drive, Elkhart, Indiana, 46514-5425 USA
Ph +1 (574) 262 8900

## 5.3. Structure of the menus

### 5.3.1. Overview

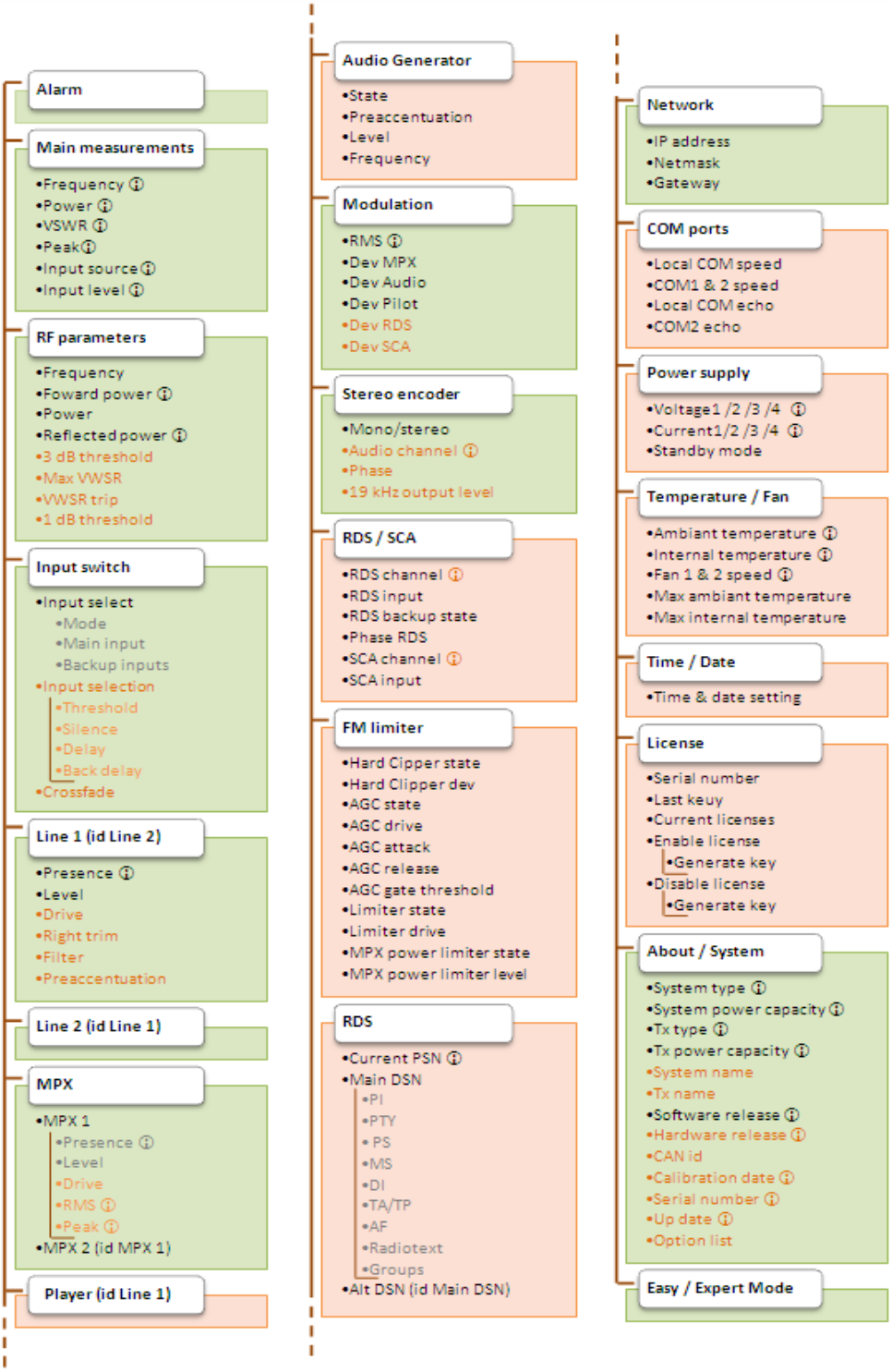


*Menus followed by ⓘ are read-only.*
*The Alarm menu only appears when at least one alarm is active.*
*Menu and menu items in orange are only visible in Expert mode.*


Crown Broadcast, a division of International Radio & Electronics Corporation 25166 Leer Drive, Elkhart, Indiana, 46514-5425 USA
Ph +1 (574) 262 8900

### 5.3.2. First level measurements

These values are read-only; bar graphs may also be available.

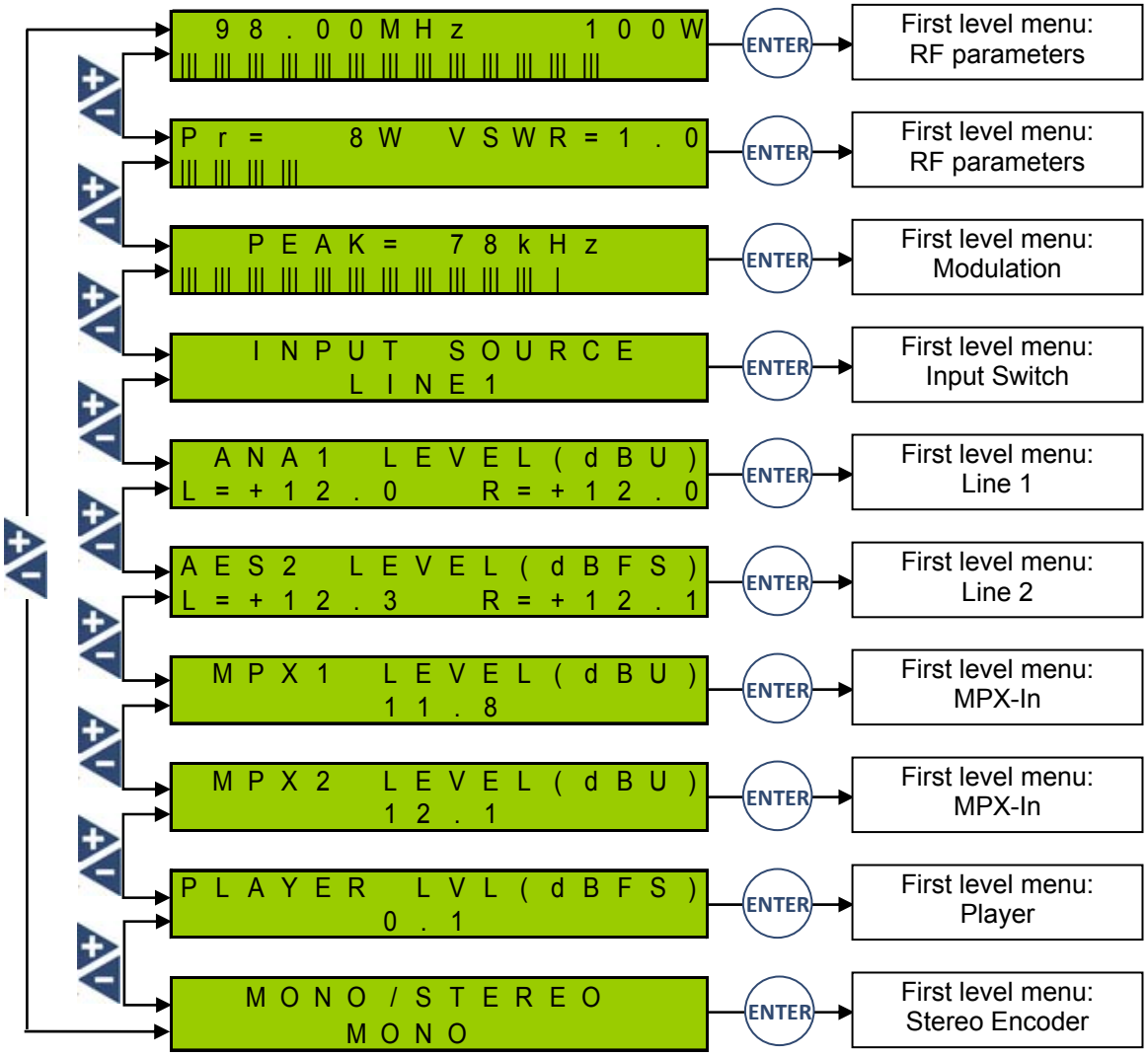


*See next page for first level menus*


Crown Broadcast, a division of International Radio & Electronics Corporation 25166 Leer Drive, Elkhart, Indiana, 46514-5425 USA
Ph +1 (574) 262 8900

### 5.3.3. First level menus

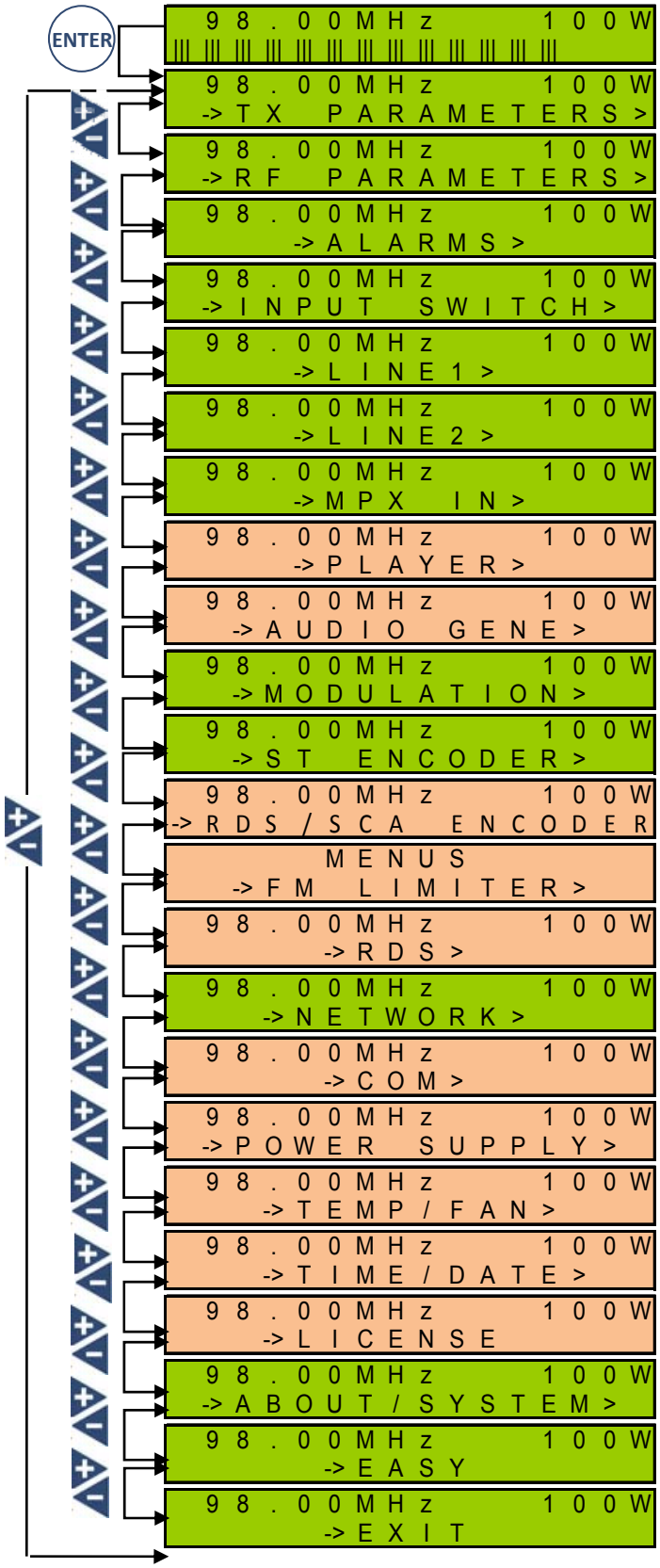


The arrow > at the end of the 2nd line indicates there is a sub-menu. Press the "Enter" key to access it.

Available menus vary depending on the options actually implemented on the transmitter and its state.

Menus in orange are only visible in Expert mode

Each menu is detailed in the following pages.

### 5.3.4.



Crown Broadcast, a division of International Radio & Electronics Corporation 25166 Leer Drive, Elkhart, Indiana, 46514-5425 USA
Ph +1 (574) 262 8900

### 5.3.4 TX Parameters menu

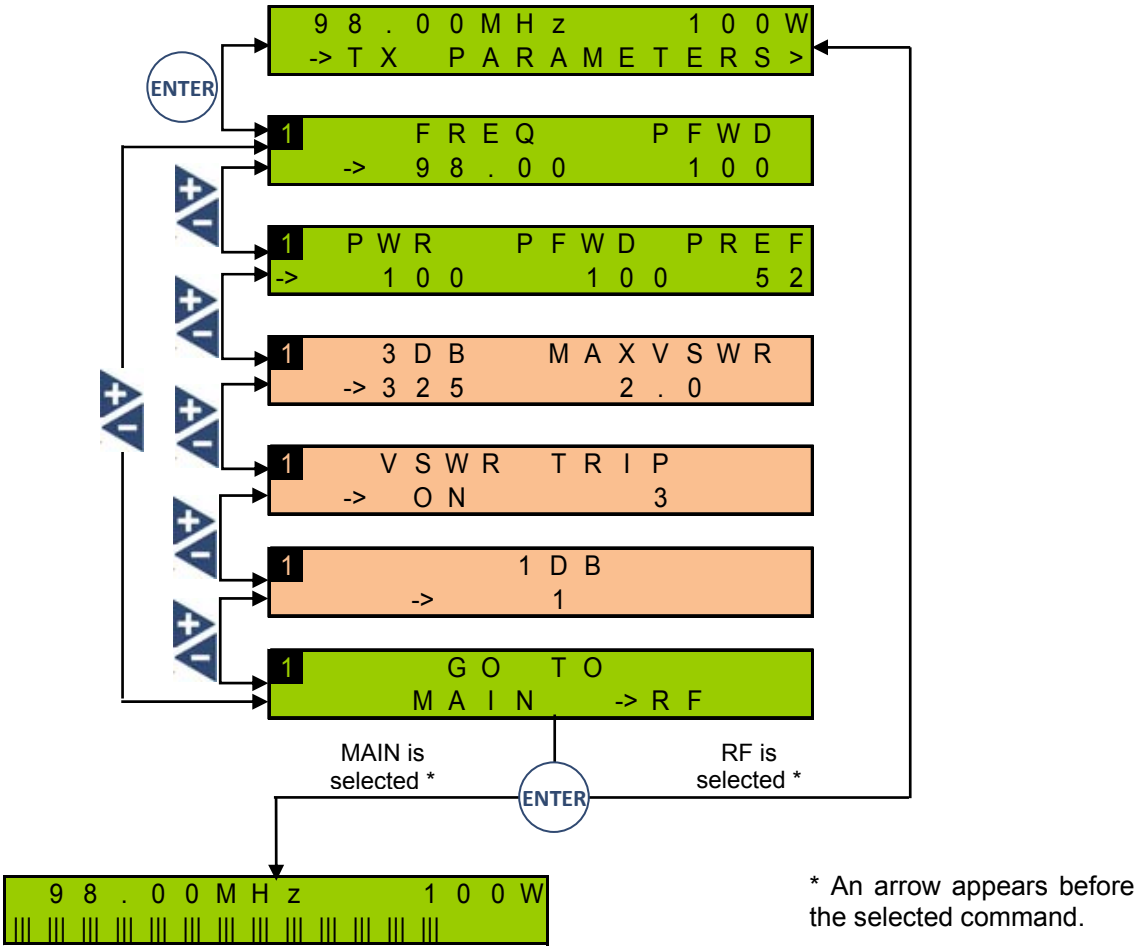


*Main measurement screen*

### 5.3.5. ALARMS menu

This read-only menu is only visible if alarms are present. It then displays one screen per current alarm. Press the ENTER key and then the + key to scroll through them.


Crown Broadcast, a division of International Radio & Electronics Corporation 25166 Leer Drive, Elkhart, Indiana, 46514-5425 USA
Ph +1 (574) 262 8900

### 5.3.6. Input Switch menu

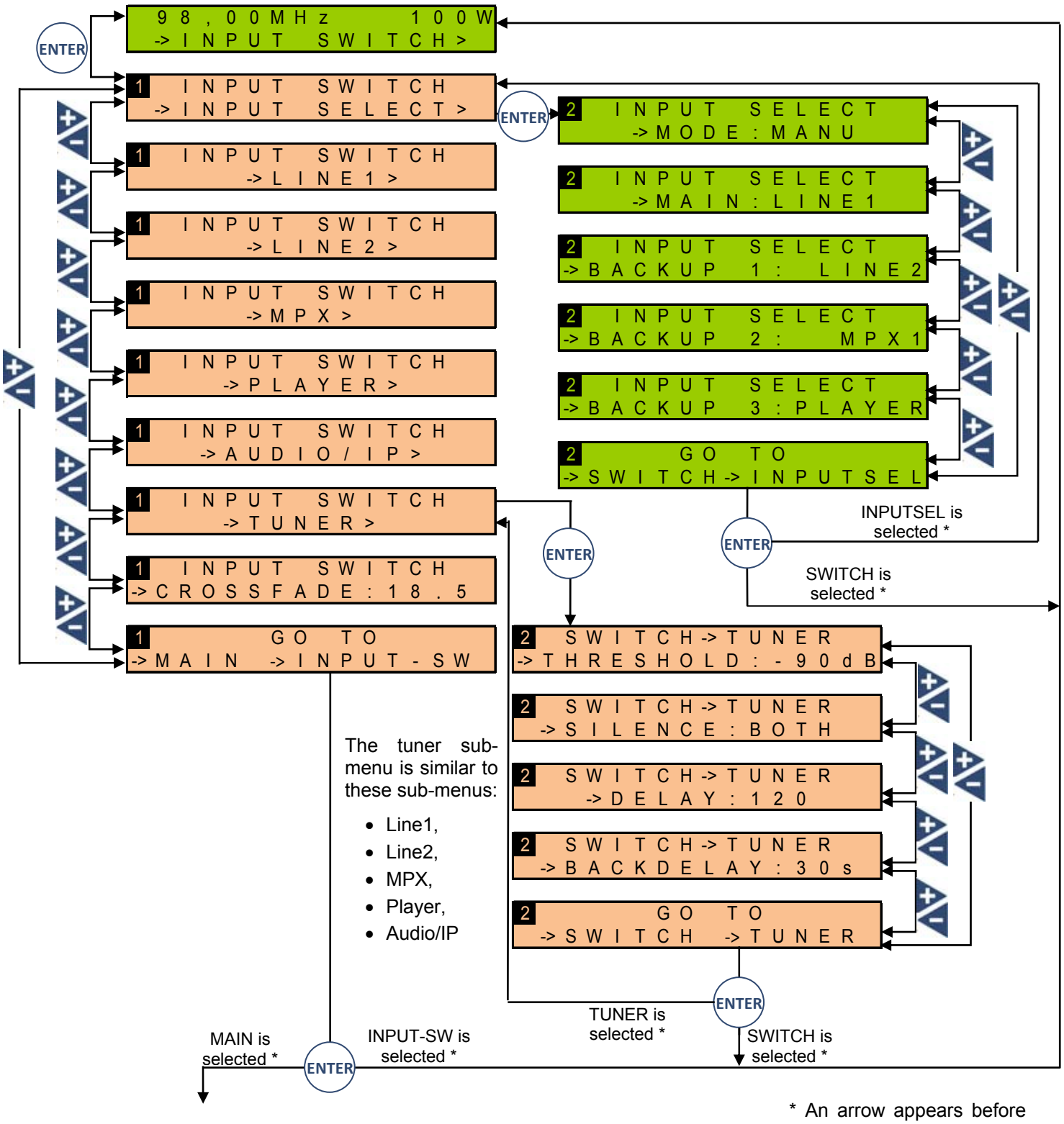


* An arrow appears before the selected command.

*Main measurement screen*



Crown Broadcast, a division of International Radio & Electronics Corporation 25166 Leer Drive, Elkhart, Indiana, 46514-5425 USA
Ph +1 (574) 262 8900

### 5.3.7. Line1 menu

(similar to the Line2 menu and to the Player menu)

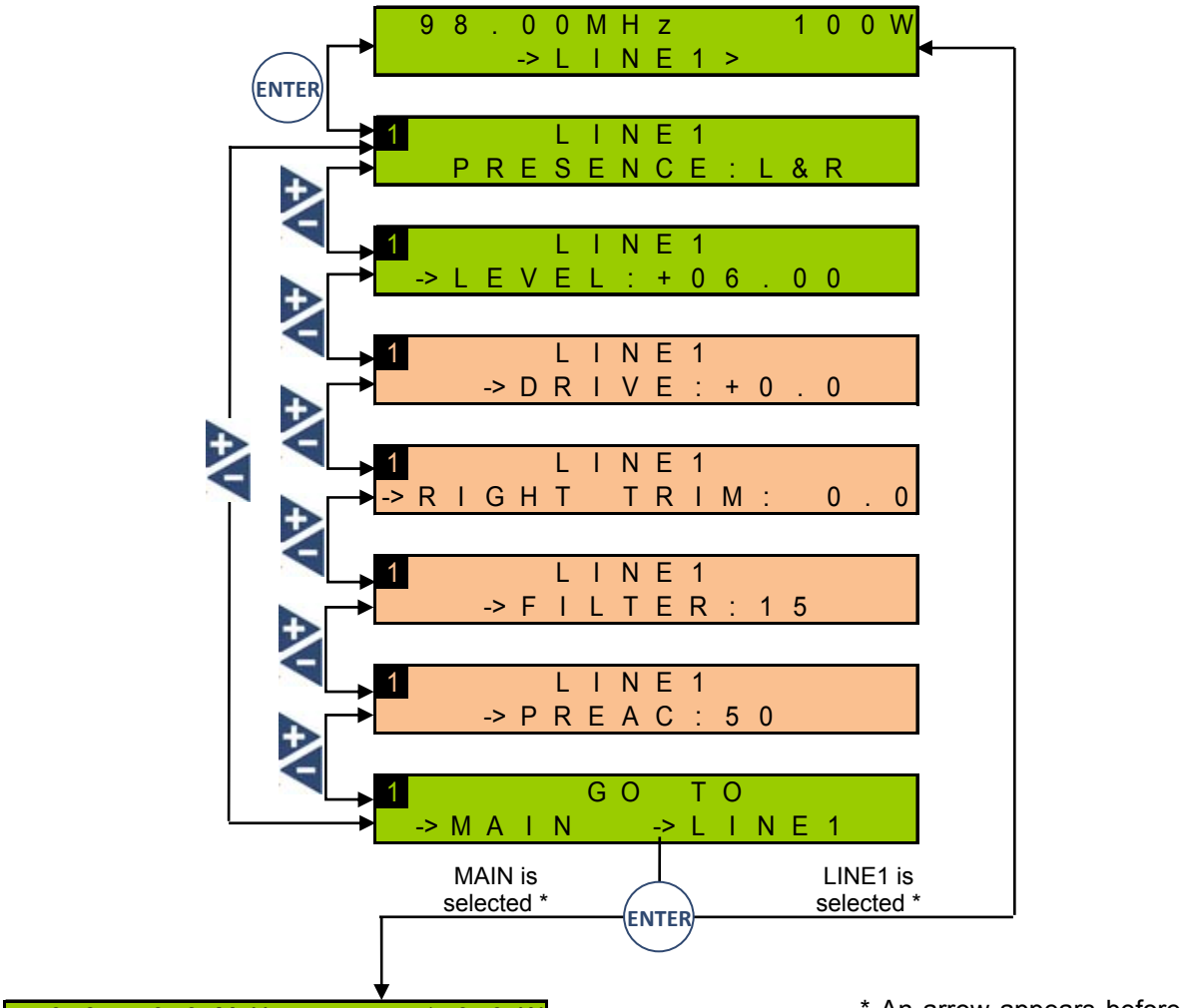


*Main measurement screen*

* An arrow appears before the selected command.


Crown Broadcast, a division of International Radio & Electronics Corporation 25166 Leer Drive, Elkhart, Indiana, 46514-5425 USA
Ph +1 (574) 262 8900

### 5.3.8. MPX In menu

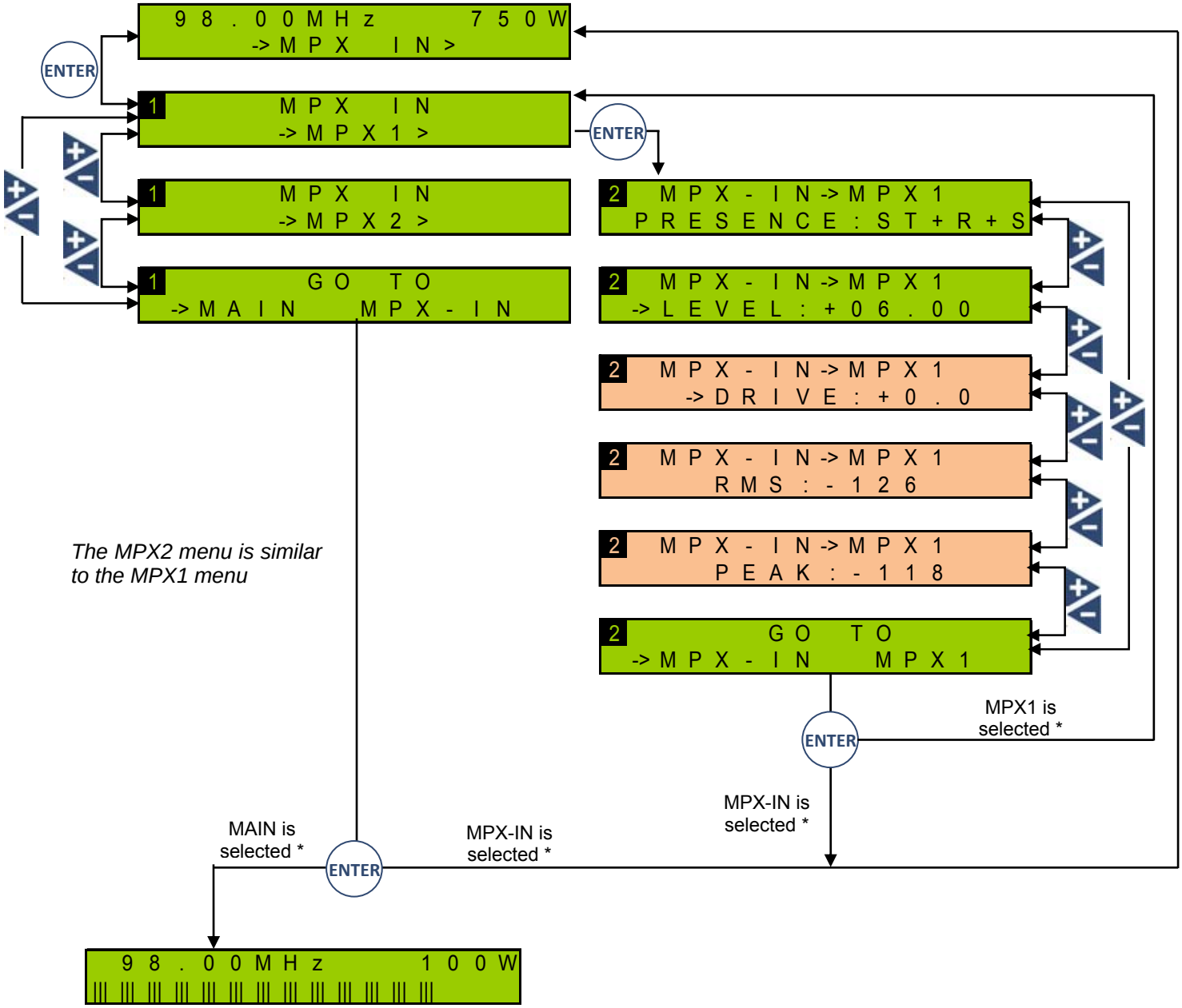


*The MPX2 menu is similar to the MPX1 menu*




*Main measurement screen*

* An arrow appears before the selected command.


Crown Broadcast, a division of International Radio & Electronics Corporation 25166 Leer Drive, Elkhart, Indiana, 46514-5425 USA
Ph +1 (574) 262 8900

### 5.3.9. Audio Gene menu

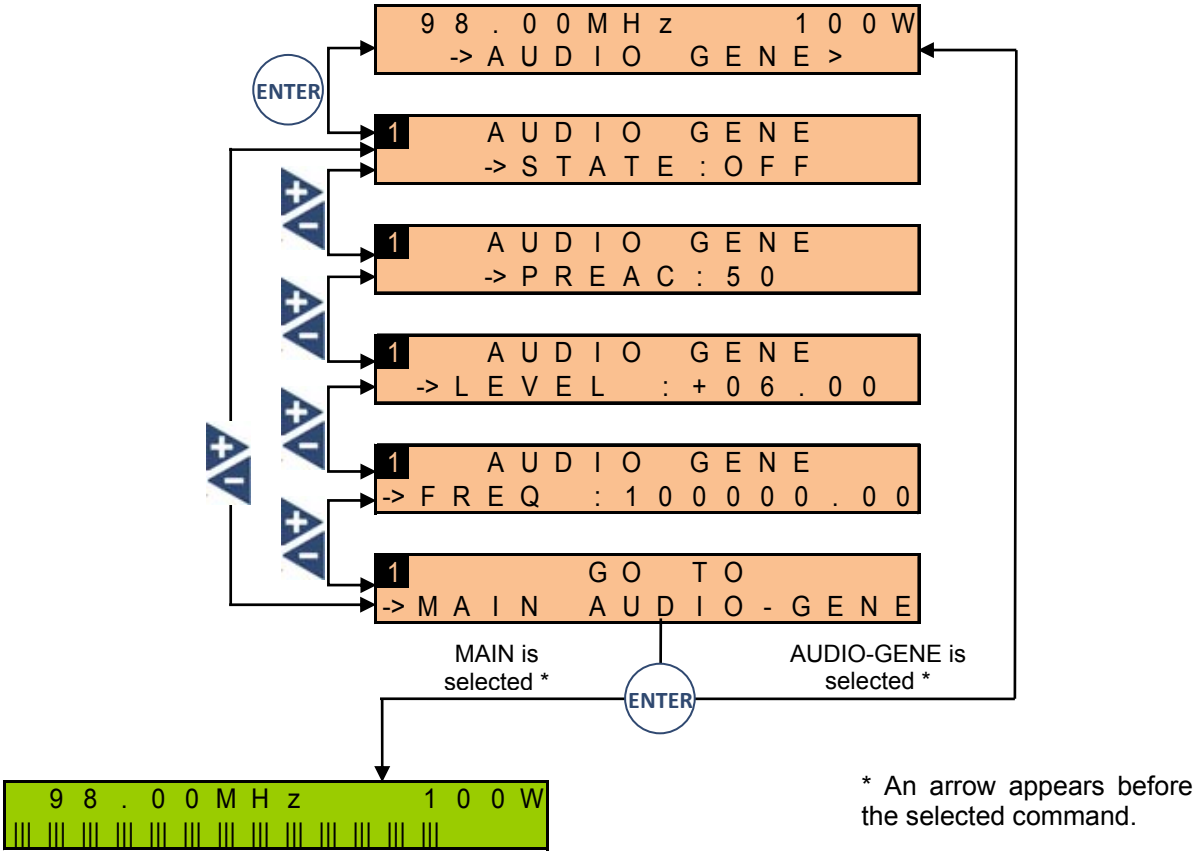


*Main measurement screen*


Crown Broadcast, a division of International Radio & Electronics Corporation 25166 Leer Drive, Elkhart, Indiana, 46514-5425 USA
Ph +1 (574) 262 8900

### 5.3.10. Modulation menu

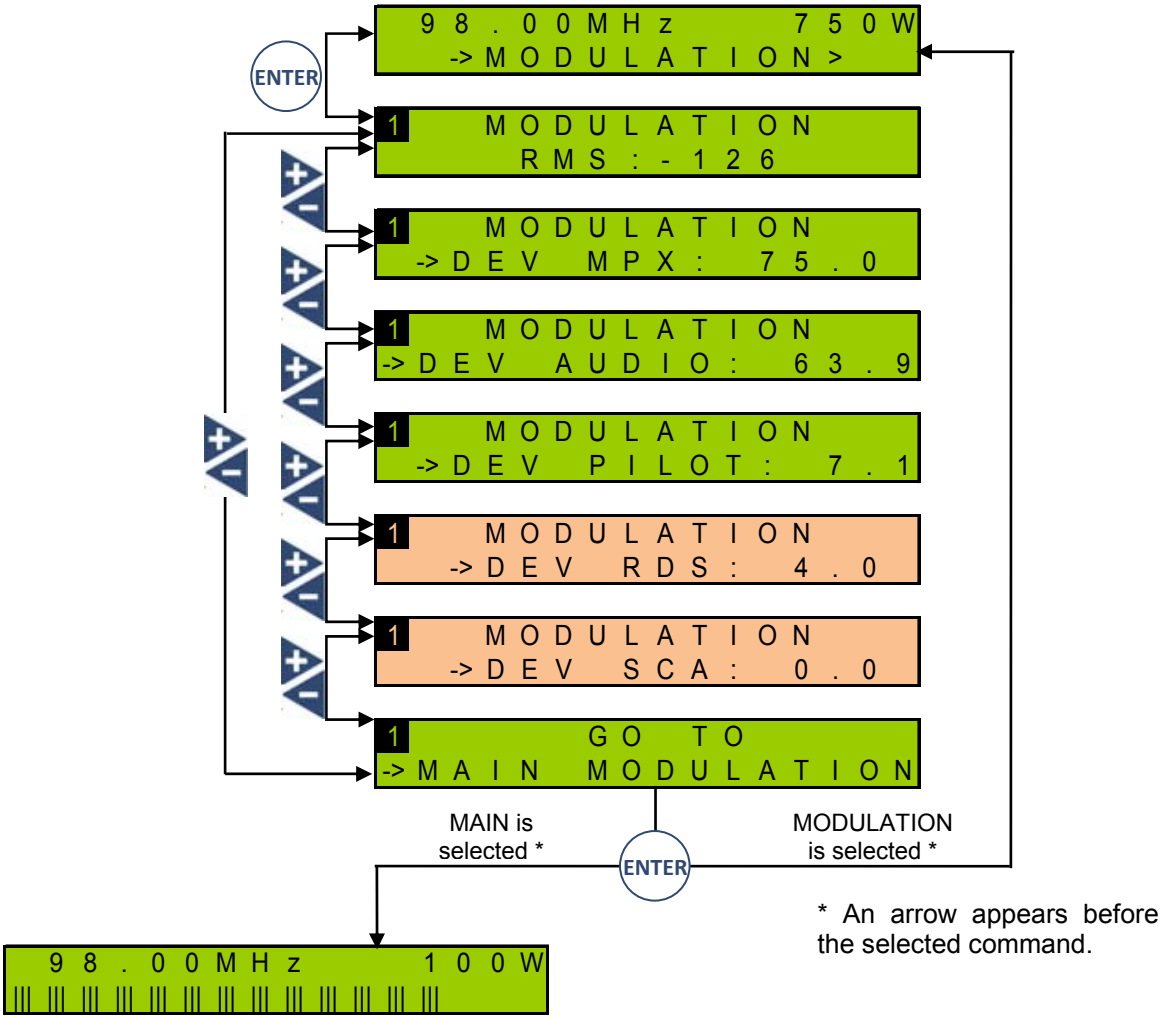


*Main measurement screen*


Crown Broadcast, a division of International Radio & Electronics Corporation 25166 Leer Drive, Elkhart, Indiana, 46514-5425 USA
Ph +1 (574) 262 8900

### 5.3.11. Stereo encoder menu

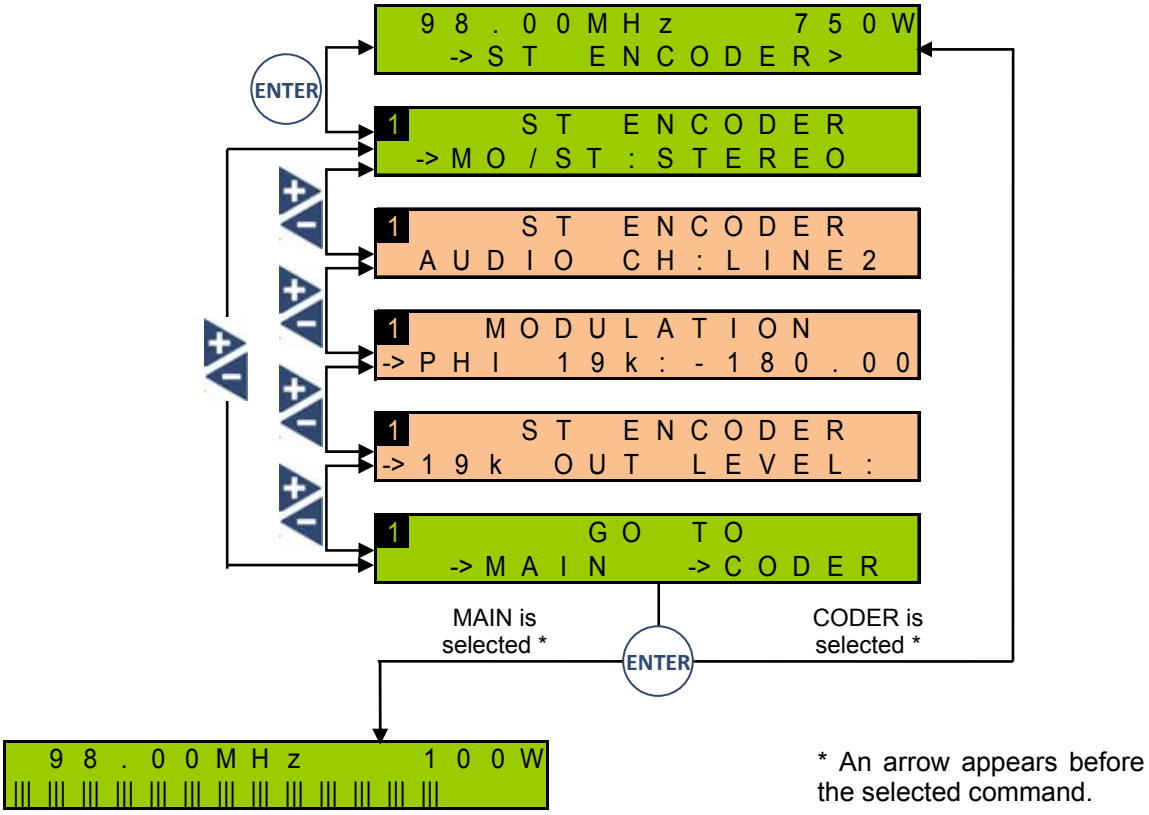


*Main measurement screen*


Crown Broadcast, a division of International Radio & Electronics Corporation 25166 Leer Drive, Elkhart, Indiana, 46514-5425 USA
Ph +1 (574) 262 8900

### 5.3.12. RDS / SCA encoder menu

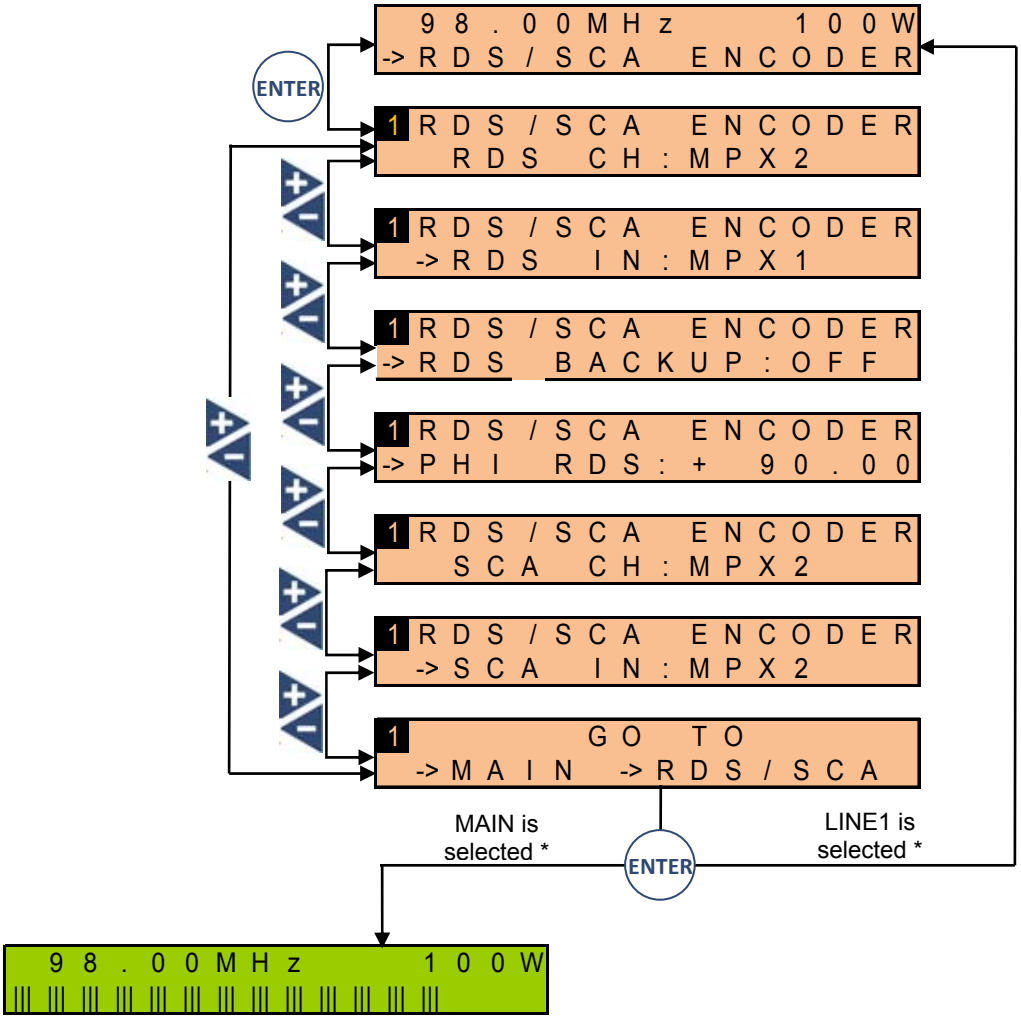


*Main measurement screen*

* An arrow appears before the selected command.


Crown Broadcast, a division of International Radio & Electronics Corporation 25166 Leer Drive, Elkhart, Indiana, 46514-5425 USA
Ph +1 (574) 262 8900

### 5.3.13. FME limiter menu

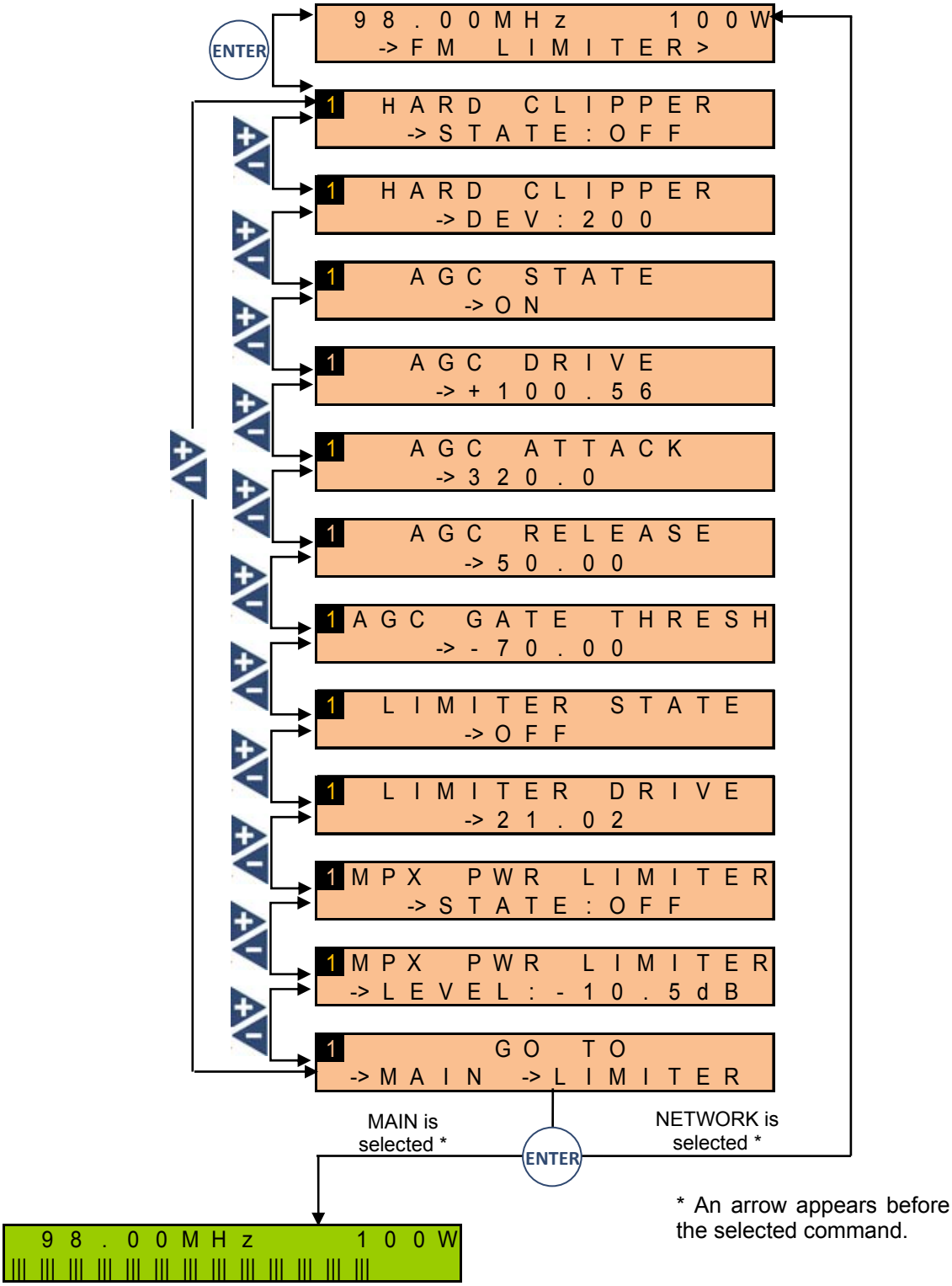


* An arrow appears before the selected command.

*Main measurement screen*


Crown Broadcast, a division of International Radio & Electronics Corporation 25166 Leer Drive, Elkhart, Indiana, 46514-5425 USA
Ph +1 (574) 262 8900

### 5.3.14. RDS menu

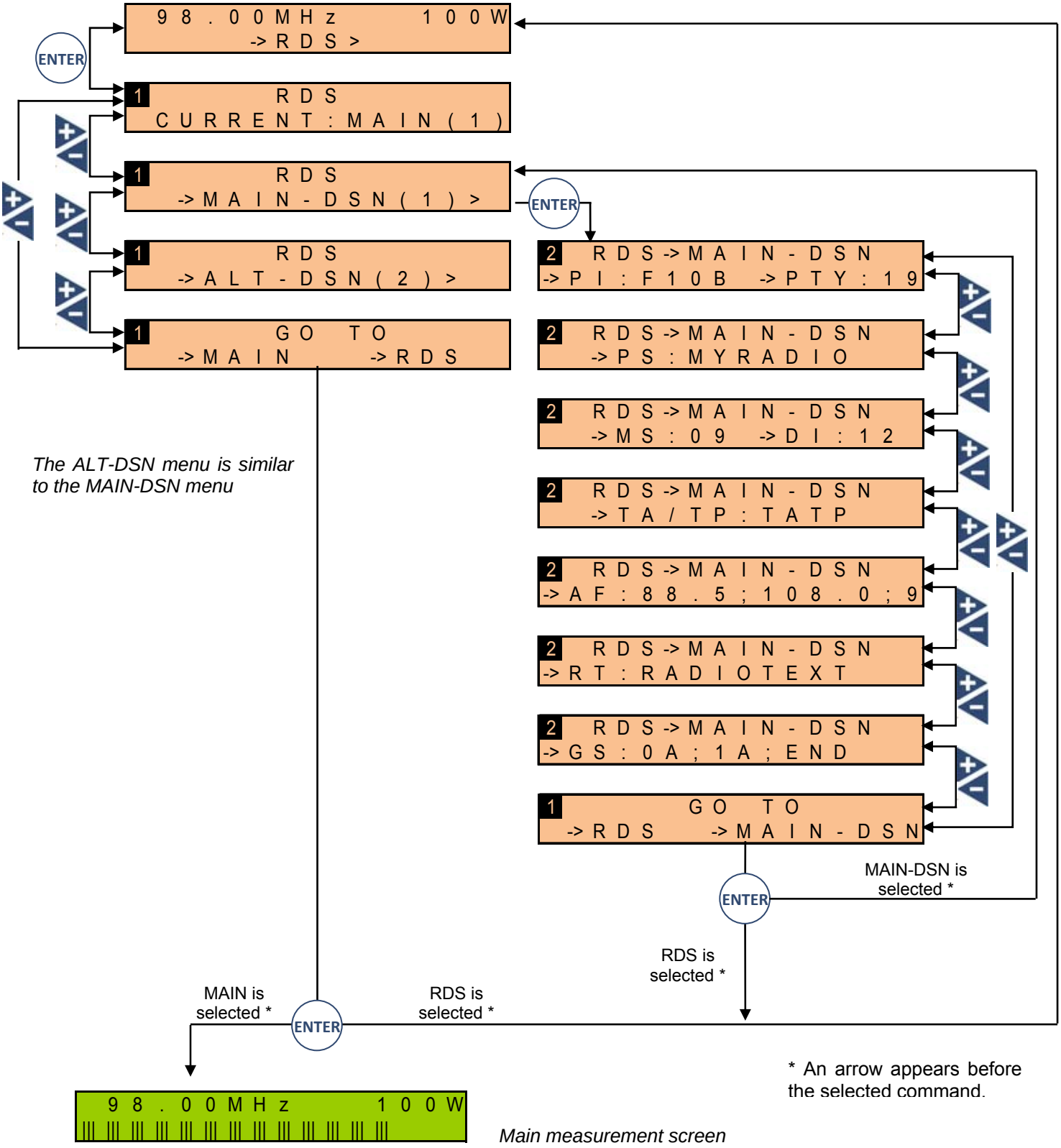


*Main measurement screen*

### 5.3.15. Network menu

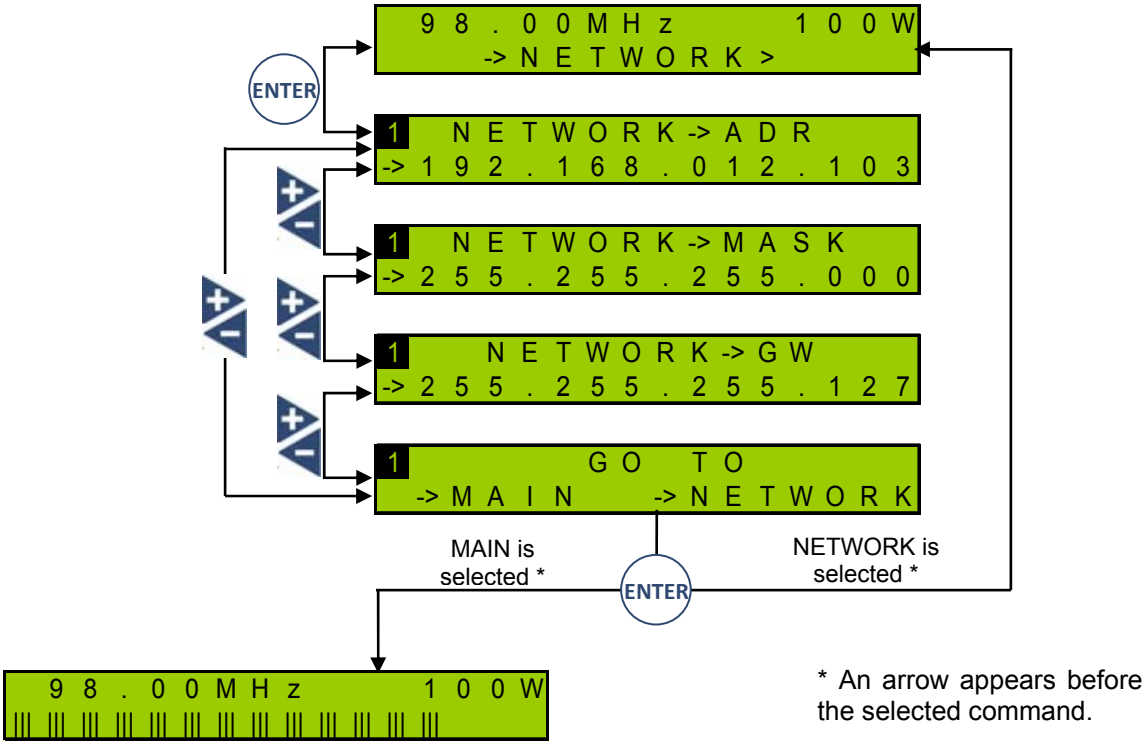


* An arrow appears before the selected command.

*Main measurement screen*



Crown Broadcast, a division of International Radio & Electronics Corporation 25166 Leer Drive, Elkhart, Indiana, 46514-5425 USA
Ph +1 (574) 262 8900

### 5.3.16. COM menu

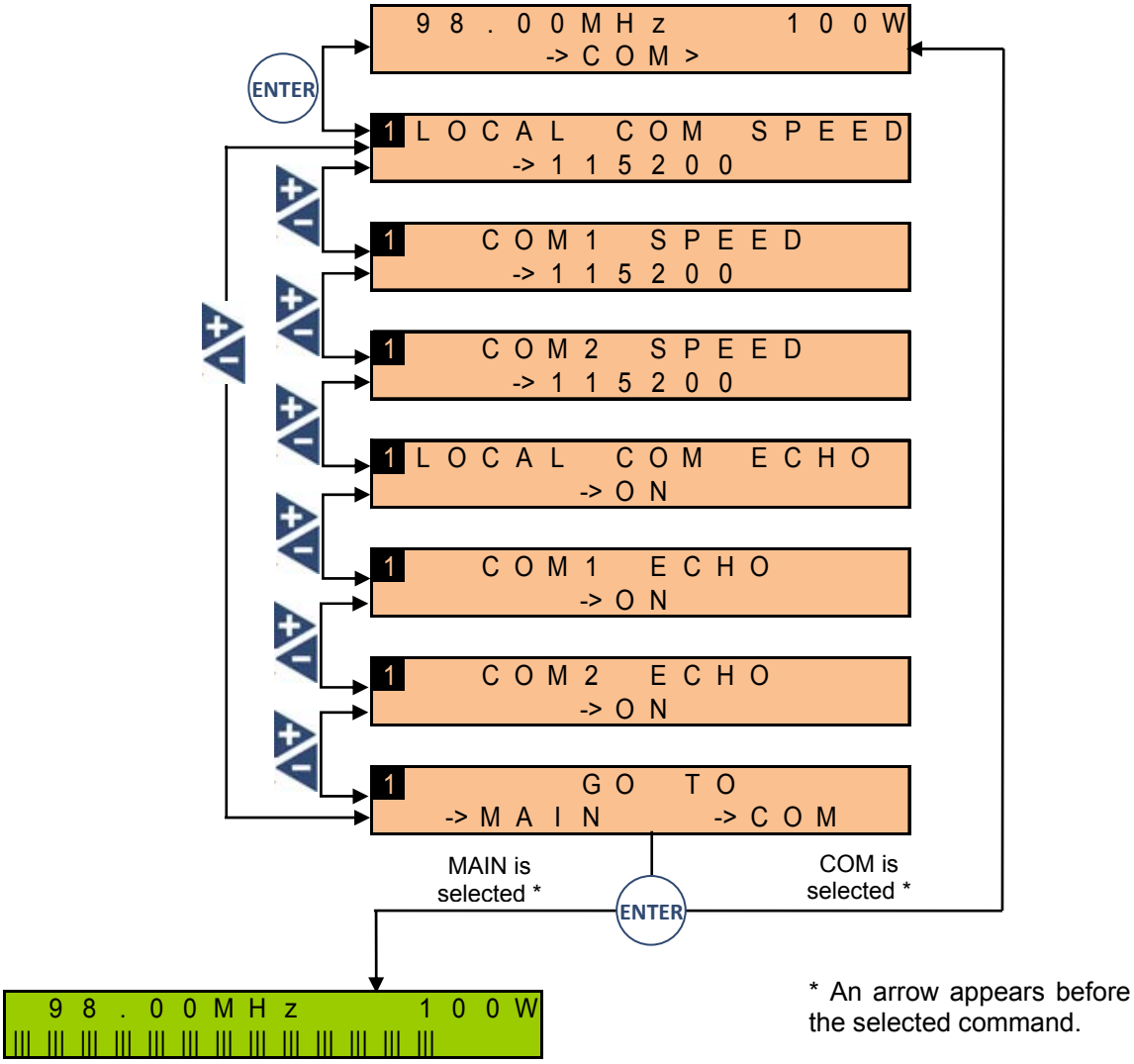


* An arrow appears before the selected command.

*Main measurement screen*



Crown Broadcast, a division of International Radio & Electronics Corporation 25166 Leer Drive, Elkhart, Indiana, 46514-5425 USA
Ph +1 (574) 262 8900

### 5.3.17. Power supply menu

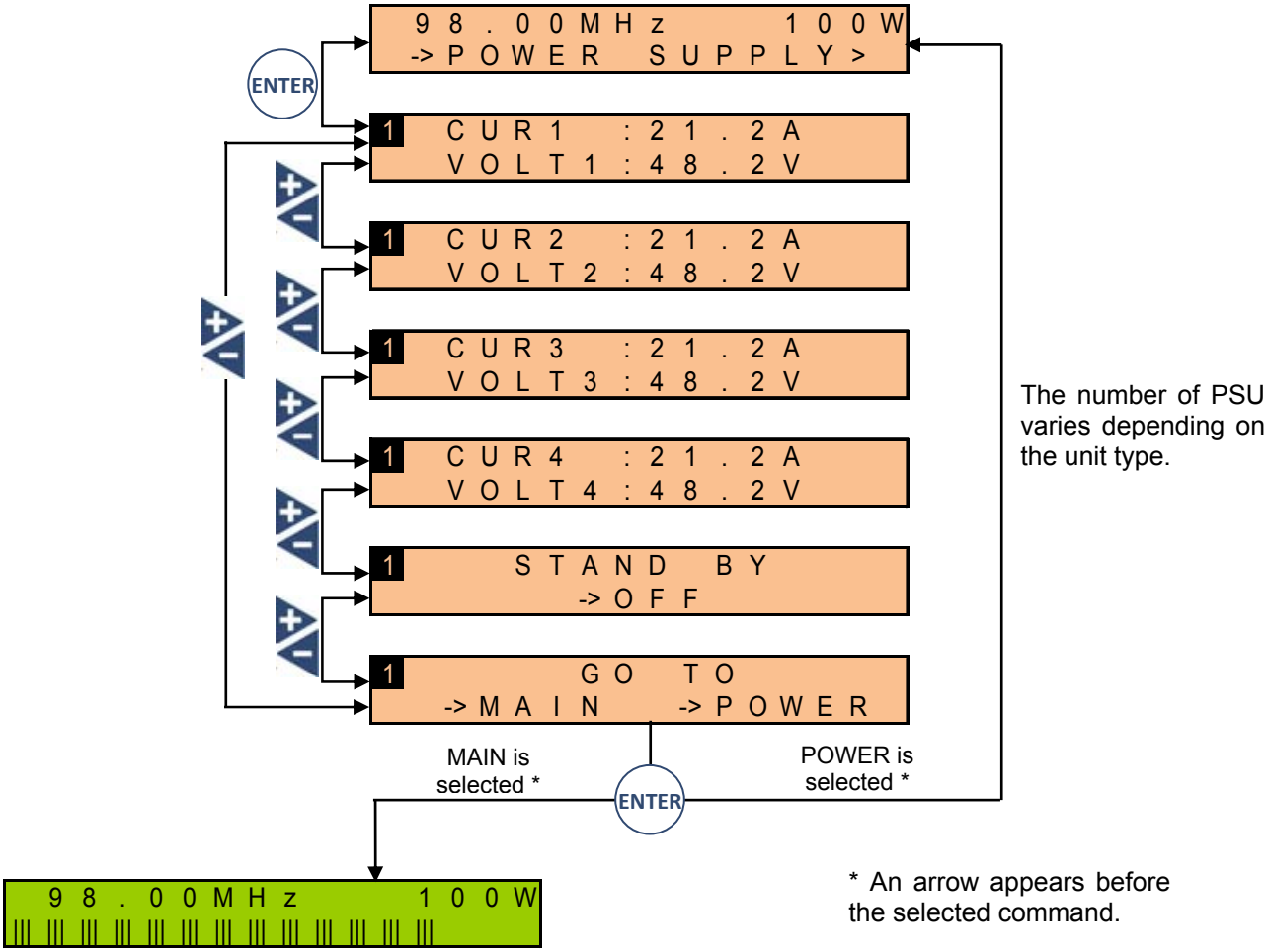


*Main measurement screen*


Crown Broadcast, a division of International Radio & Electronics Corporation 25166 Leer Drive, Elkhart, Indiana, 46514-5425 USA
Ph +1 (574) 262 8900

### 5.3.18. Temp/Fan menu

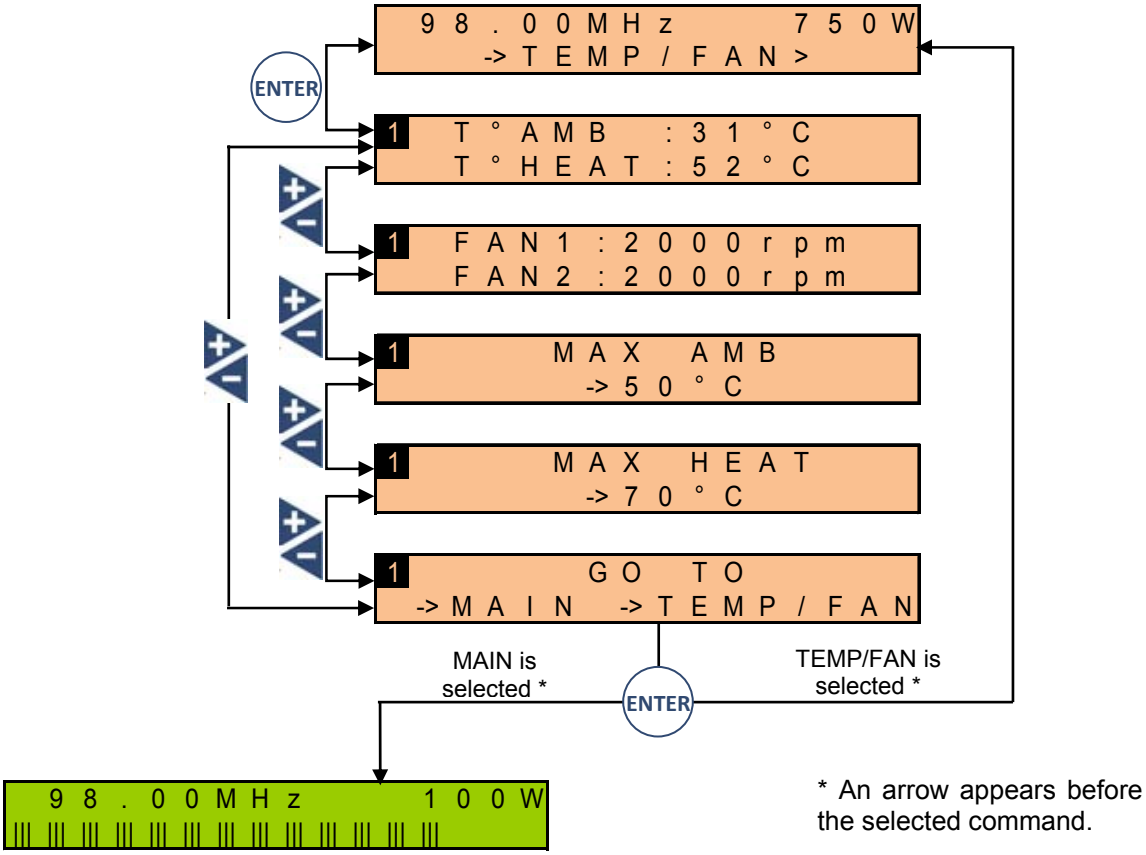


* An arrow appears before the selected command.

*Main measurement screen*


Crown Broadcast, a division of International Radio & Electronics Corporation 25166 Leer Drive, Elkhart, Indiana, 46514-5425 USA
Ph +1 (574) 262 8900

### 5.3.19. Time/Date menu

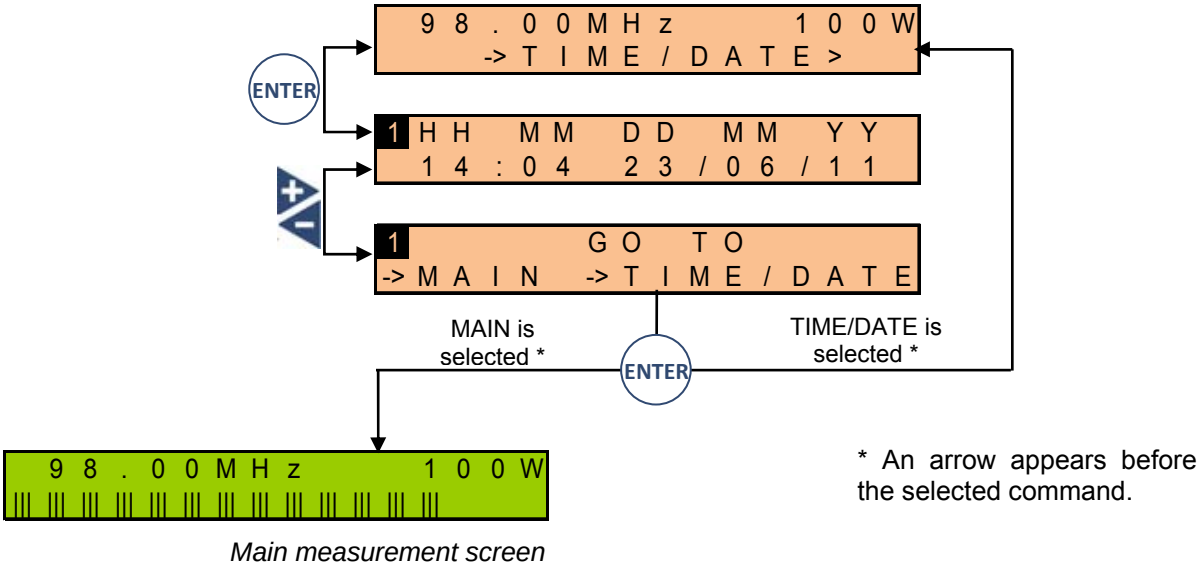


*Main measurement screen*



Crown Broadcast, a division of International Radio & Electronics Corporation 25166 Leer Drive, Elkhart, Indiana, 46514-5425 USA
Ph +1 (574) 262 8900

### 5.3.20. License menu

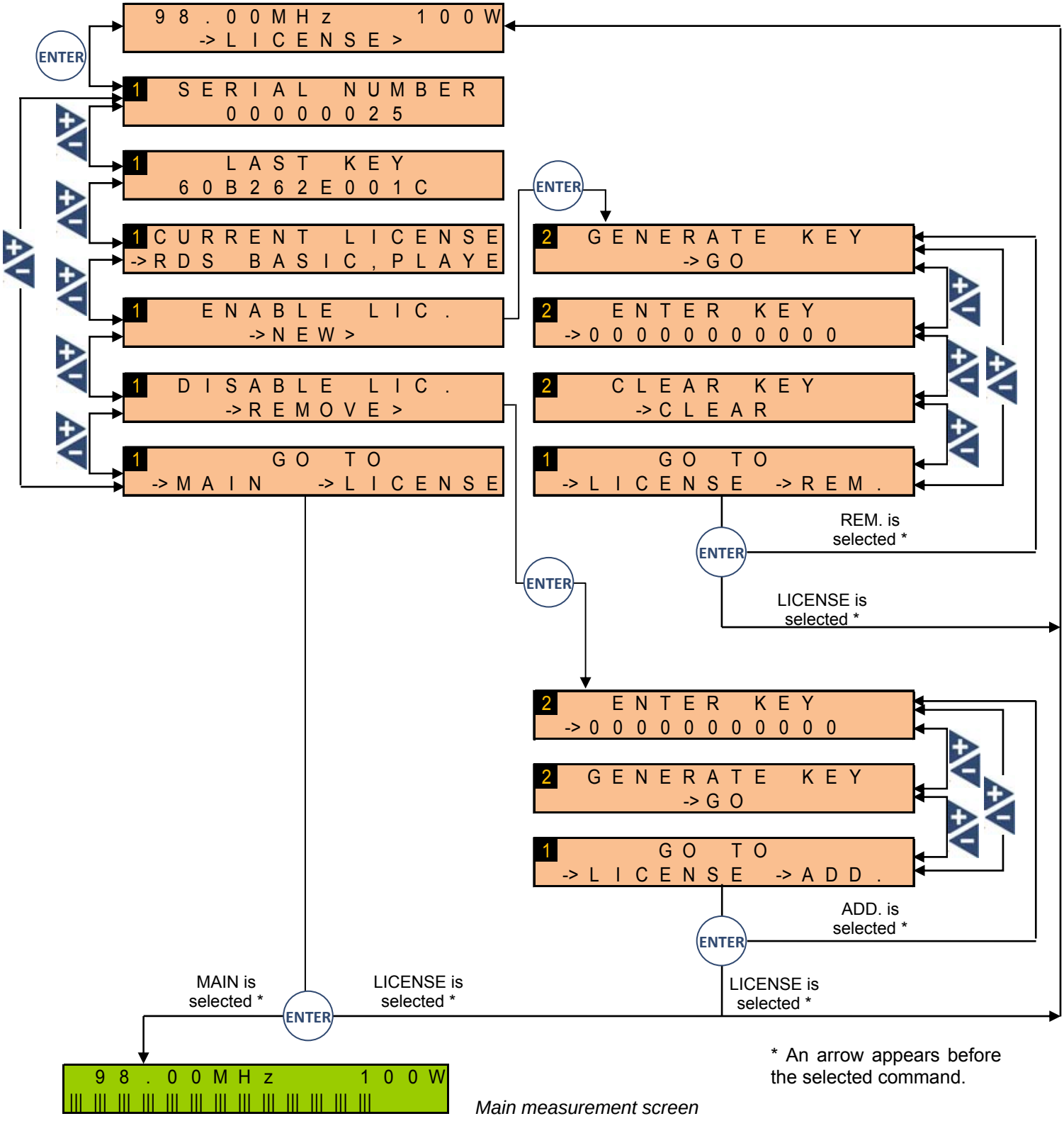


*Main measurement screen*


Crown Broadcast, a division of International Radio & Electronics Corporation 25166 Leer Drive, Elkhart, Indiana, 46514-5425 USA
Ph +1 (574) 262 8900

### 5.3.21. About / System menu

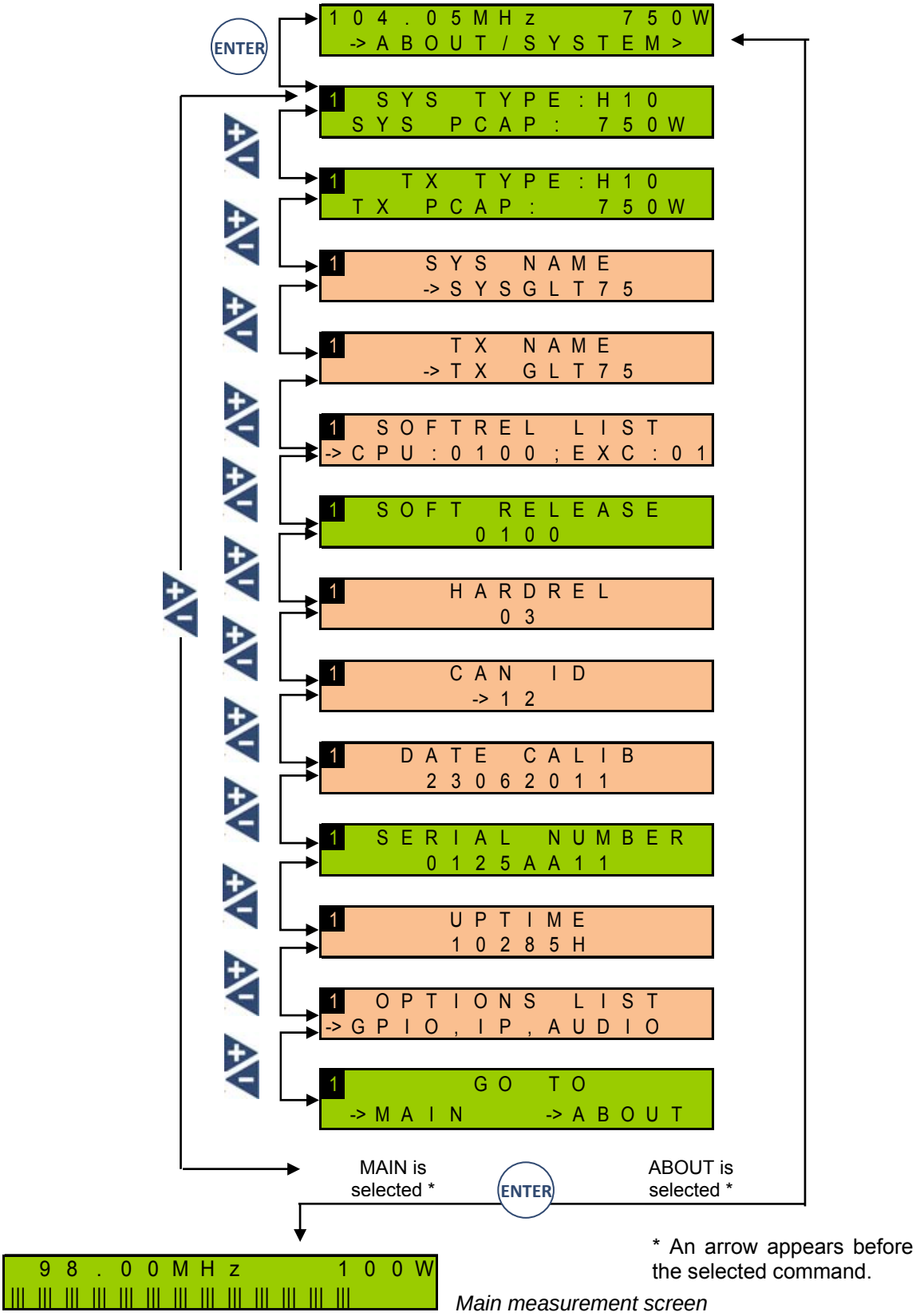


* An arrow appears before the selected command.

*Main measurement screen*



Crown Broadcast, a division of International Radio & Electronics Corporation 25166 Leer Drive, Elkhart, Indiana, 46514-5425 USA
Ph +1 (574) 262 8900

### 5.3.22. Easy/Expert menu

### 5.3.23. Exit menu

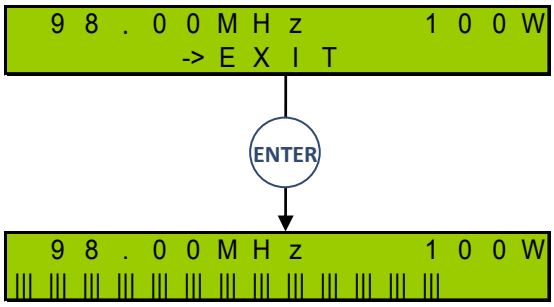


*Main measurement screen*


Crown Broadcast, a division of International Radio & Electronics Corporation 25166 Leer Drive, Elkhart, Indiana, 46514-5425 USA
Ph +1 (574) 262 8900

## 5.4. Main parameters description

Parameters are described for the main menus; serial commands are indicated in parenthesis. Possible values and/or value format are indicated for each parameter.

### 5.4.1. TX Parameters menu

These parameters are available as TX and CONF serial commands (see sections 6.2.8 and 6.2.3).

**3 DB** (TX.3DB)

With this parameter, set the triggering threshold for the 3 dB alarm. Default value is half the transmitter's power.

From 0 to 9999 dB (depending on the transmitter's power)

**MAX VSWR** (TX.VSWR.MAX)

With this parameter, set the triggering threshold for the VSWR alarm.

From 0 to 99.9

**VSWR TRIP** (TX.VSWRTRIP)

With this parameter, enable or disable the reflected power safety (ON or OFF). In case the VSWR is too high (reflected power greater than the maximum threshold), RF is disabled and automatically starts again. If the fault is still present, the cut/restart process is repeated 3 times. If the 3rd time it is still present, the transmitter is cut for good.

### 5.4.2. Input Switch menu

These parameters are available as INPUT and CONF serial commands (see sections 6.2.5 and 6.2.3) but are managed differently. The PRIO parameter for each input sets the selection order for the various audio sources.

**MODE**

With this parameter, choose whether audio source selection is done manually or automatically. In manual mode, the user selected audio source is used regardless of the state of the audio source. In auto mode, the effective audio source depends directly on the switching configuration and on the channels selected as Main or as Backup (1, 2 or 3).

MANU or AUTO

**MAIN**

With this parameter, select the main audio source.

LINE1, LINE2, MPX1, MPX2 or GENE


Crown Broadcast, a division of International Radio & Electronics Corporation 25166 Leer Drive, Elkhart, Indiana, 46514-5425 USA
Ph +1 (574) 262 8900

**BACKUP 1 / BACKUP 2 / BACKUP 3**

With this parameters, select the audio sources which the transmitter will switch to in case of issue.

LINE1, LINE2, MPX1, MPX2 ou GENE

**CROSSFADE** (CONF.CROSSFADE) - – read/write
With this parameter, set the crossfade time between channels when switching from one to the next (in seconds).

From 0 to 25.5 s

***LINE 1 or 2 / MPX / PLAYER sub menu***

These parameters are available as INPUT.LINE1.SW / INPUT.LINE2.SW / INPUT.MPX.SW / INPUT.PLAYER.SW serial commands (see section 6.2.5).

**THRESHOLD** (INPUT.xx.SW.THRESH) – read/write

With this parameter, set the silence threshold level in dBFS on the selected channel.

From -90 to 0 dBFS

**SILENCE** (INPUT.xx.SW.SILENCE) – read/write

With this parameter, select the channel (L / R / L or R / L and R) on which silence detection must be performed. (Not available on the MPX sub-menus.)

L, R, ANY or BOTH

**DELAY** (INPUT.xx.SW.DELAY) – read/write

With this parameter, set the switching delay in seconds when audio loss occurs.

From 1 to 120 s

**BACK DELAY** (INPUT.xx.SW.BACKDELAY) – read/write

With this parameter, set the delay before returning to the highest priority channel, in seconds.

From 0 to 30 s

### 5.4.3. Line1 menu (ANA)

These parameters are available as INPUT.LINE1 serial commands (see section 6.2.5).

**PRESENCE** (INPUT.LINE1.PRESENCE) – read only

This parameter indicates the presence of audio signal at the input: none, left, right or L&R.

NONE, L, R, L&R


Crown Broadcast, a division of International Radio & Electronics Corporation 25166 Leer Drive, Elkhart, Indiana, 46514-5425 USA
Ph +1 (574) 262 8900

**LEVEL** (INPUT.LINE1.LEVEL) – read/write

This parameter is the max audio peak in dBu that can come from the transmitter on the LINE1 input. For example, if the audio peak from the source is +6 dBu, this parameter must be set to +6 dBu for optimal operation. If you do not know the audio source level, you may use an audio analyzer or display first level measurements on the front panel to read the LINE1 LEVEL. Be aware that if the level is poorly set the deviation may become too low or too high. This level is also called nominal level, i.e. the level producing the deviation as set in the Modulation menu.

From -18 dBu to +18 dBu

**DRIVE** (INPUT.LINE1.DRIVE) – read/write

With this parameter, you can slightly compensate the input audio level. It directly affects the final deviation. A negative value decreases the deviation; a positive value can increase the deviation and/or cause the MPX hard clipper to be used (if enabled) which in turn may lead to audio distortion. We recommend you leave it at 0 dB.

From -6 dB to +6 dB

**RIGHT TRIM** (INPUT.LINE1.TRIM) – read/write

With this parameter, you can correct the balance between the Left and Right channels. However, it is better to look for and correct the cause of a lack of balance (before the transmitter) rather than correcting it at this stage. A positive value increases the Right channel; a negative value decreases the Right channel level. It is best to leave it at 0 dB.

From -3 dB to +3 dB

**FILTER** (INPUT.LINE1.FLT) – read/write

This parameter is crucial; it sets the low-pass filter applied on the audio input. The FME bandwidth is limited to 15 kHz, so **the filter must be set to 15 kHz for the FME**. Digital technology and the quality of the internal stereo encoder make it possible to set the filter at 16 or 17 kHz while maintaining an acceptable pilot protection. Select 0 kHz to disable the filter. This solution can be used in mono operation (in stereo operation, the incidence on the MPX signal and its sub-carrier would be too great) or when a 15 kHz filter is already used upstream as with an FME processor, for instance. In this specific situation, you may also use 2 filters, the standard 15 kHz standard filter with the external processor, plus the 16 kHz transmitter filter. The listeners will hear the processor's filter; the internal filter will take the relay in case of issue with the processor.

0, 15, 16 or 17 kHz

**PREACC** (INPUT.LINE1.PREAC) – read/write

With this parameter, set the pre-emphasis. Select 0 µs is the audio signal is pre-emphasized before getting to the transmitter. Otherwise, select according to the country: 50 µs in Europe, 75 µs in the USA.

0, 50 or 75 µs


Crown Broadcast, a division of International Radio & Electronics Corporation 25166 Leer Drive, Elkhart, Indiana, 46514-5425 USA
Ph +1 (574) 262 8900

### 5.4.4. Line2 menu (AES)

These parameters are available as INPUT.LINE2 serial commands (see section 6.2.5).

They are identical to LINE1 menu parameters, except for the level.

**LEVEL** (INPUT.LINE2.LEVEL) – read/write

This parameter is the max audio peak in dBu that can come from the transmitter on the LINE2 input. For example, if the audio peak from the source is -4 dBFS, this parameter must be set to -4 dBFS for optimal operation. If you do not know the audio source level, you may use an audio analyzer or display first level measurements on the front panel to read the LINE2 LEVEL. Be aware that if the level is poorly set, the deviation may become too low or too high. This level is also called nominal level, i.e. the level producing the deviation as set in the Modulation menu.

From -20 dBFS to 0 dBFS

### 5.4.5. MPX In menu

***MPX1 or MPX2 Sub-menu***

These parameters are available as INPUT.MPX1 / INPUT.MPX2 serial commands (see section 6.2.5).

**TYPE** (INPUT.MPXn.TYPE) – read/write

This parameter applies a filter to extract the type of signal needed on the MPXn input. This filtered signal will become the MPXn channel audio signal. Note that when switching from stereo to mono, the total deviation is maintained.

MO (mono), ST (stereo), ST+R+S (stereo+RDS+SCA), ST+R (stereo+RDS), RDS, R+S (RDS+SCA), SCA or NONE

**PRESENCE** (INPUT.MPXn.PRESENCE) – read only

This parameter indicates the composition of the signal on the MPXn entry.

MO (mono), MO+R (mono+RDS), MO+R+S (mono+RDS+SCA), ST (stereo), ST+R (stereo+RDS) ou ST+R+S (stereo+RDS+SCA)

**LEVEL** (INPUT.MPXn.LEVEL) – read/write

This parameter is the max audio peak in dBu that can come from the transmitter on the MPX input. For example, if the audio peak from the source is +6 dBu, this parameter must be set to +6 dBu for optimal operation. If you do not know the audio source level, you may use an audio analyzer or display first level measurements on the front panel to read the MPXn LEVEL. Be aware that if the level is poorly set, the deviation may become too low or too high. This level is also called nominal level, i.e. the level producing the deviation as set in the Modulation menu.

From -18 dBu to +18 dBu


Crown Broadcast, a division of International Radio & Electronics Corporation 25166 Leer Drive, Elkhart, Indiana, 46514-5425 USA
Ph +1 (574) 262 8900

**DRIVE** (INPUT.MPXn.DRIVE) – read/write

With this parameter, you can slightly compensate the input audio level. It directly affects the final deviation. A negative value decreases the deviation; a positive value can increase the deviation and/or cause the MPX hard clipper to be used (if enabled) which in turn may lead to audio distortion. We recommend you leave it at 0 dB.

From -6 dB to +6 dB

**RMS** (INPUT.MPXn.RMS) – read only

This parameter indicates the average value of the transmitted signal's excursion in kHz.

From -150 to +150 kHz

**PEAK** (INPUT.MPXn.PEAK) – read only

This parameter indicates the peak value of the transmitted signal's excursion in kHz.

From -150 to +150 kHz

### 5.4.6. Player menu

These parameters are available as INPUT.PLAYER serial commands (see section 6.2.5).

They are identical to LINE2 menu parameters.

### 5.4.7. Audio Gene menu

The audio generator is a multiplex channel and is therefore not affected by the stereo encoder parameters.

These parameters are available as INPUT.AUDIOGEN serial commands (see section 6.2.5).

**STATE** (INPUT.AUDIOGEN.STATE) – read/write

With this parameter, set the type of MPX signal generated by the internal generator.

OFF, PILOT, L, R, L+R (mono) or L-R (stereo)

**PREAC** (INPUT.AUDIOGEN.PREAC) – read/write

With this parameter, set the pre-emphasis. Select 0 µs is the audio signal is pre-emphasized before getting to the transmitter. Otherwise, select according to the country: 50 µs in Europe, 75 µs in the USA.

0, 50 or 75 µs

**LEVEL** (INPUT.AUDIOGEN.LEVEL) – read/write

With this parameter, set the internal generator audio level.

From -100.00 to 12.00 dBFS


Crown Broadcast, a division of International Radio & Electronics Corporation 25166 Leer Drive, Elkhart, Indiana, 46514-5425 USA
Ph +1 (574) 262 8900

**FREQ** (INPUT.AUDIOGEN.FREQ) – read/write

With this parameter, set the internal generator audio frequency.

From 0 to 100000.00 Hz

### 5.4.8. Modulation menu

These parameters are available as MEAS.DEV and CONF serial commands (see section 6.2.2 and 6.2.3).

**RMS** (MEAS.DEV.RMS) – read only

This parameter indicates the average value of the transmitted signal's excursion in kHz.

From -150 to +150 kHz

**DEV MPX** (CONF.DEV.MPX) – read/write

With this parameter, set the maximum MPX deviation in kHz generated when the audio source is at the nominal level. (The nominal level is set with the LEVEL parameter of the menus: LINE1, LINE2, MPX1 or MPX2.) It is often set at 75 kHz but this value may vary according to the country and relevant regulatory authorities. To ensure the sub-carrier levels remain stable, this parameter directly changes the audio deviation.

From 0 to 150.00 kHz

**DEV AUDIO** (CONF.DEV.AUDIO) – read/write

With this parameter, set the maximum audio deviation in kHz generated when the audio source is at the nominal level (the nominal level is set with the LEVEL parameter of the menus: LINE1, LINE2, MPX1 or MPX2). The audio deviation is set automatically when the MPX deviation parameter is set; however, it is possible to set the audio deviation rather than the MPX deviation. Increasing or decreasing the audio deviation affects the total deviation and thus automatically adjusts the MPX deviation. Make sure to avoid overmodulation.

From 0 to 150.00 kHz

**DEV PILOT** (CONF.DEV.PILOT) – read/write

With this parameter, set the 19 kHz pilot deviation. For countries modulating at 75 kHz, the pilot deviation should be 10% of the total deviation, i.e. 7.5 kHz without RDS or 7.1 kHz if RDS is used.

From 0 to 25.5 kHz

**DEV RDS** (CONF.DEV.RDS) – read/write

With this parameter, set the RDS sub-carrier deviation. The most widely used value is 4 kHz.

From 0 to 25.5 kHz


Crown Broadcast, a division of International Radio & Electronics Corporation 25166 Leer Drive, Elkhart, Indiana, 46514-5425 USA
Ph +1 (574) 262 8900

**DEV SCA** (CONF.DEV.SCA) – read/write

With this parameter, set the SCA deviation (auxiliary sub-carrier other than RDS), as needed.

From 0 to 25.5 kHz

**Interaction between the various components according to the input type:**

In all cases described below, the transmitter configuration is as follows:

Audio = 67.5 kHz

Pilot = 7.5 kHz

RDS = 4.0 kHz.

In the case of audio inputs (analog or AES), the set MPX represents the total of audio, pilot and RDS. If the RDS is disabled, the audio is automatically adjusted with +4 kHz.

Ex 1: set MPX = 75 kHz

Pilot = 7.5 kHz

RDS = 4.0 kHz.

If the RDS is enabled: Audio = 63.5 kHz

Pilot = 7.5 kHz

RDS = 4.0 kHz

If the RDS is disabled: Audio = 63.5 + 4 = 67.5 kHz

Pilot = 7.5 kHz

In the case of MPX inputs, if the RDS is disabled, **the audio cannot be adjusted**.

Ex 2: inject stereo MPX + RDS with:

Audio = 63.5 kHz

Pilot = 7.5 kHz

RDS = 4.0 kHz.

If the RDS is disabled: Audio = 63.5 kHz

Pilot = 7.5 kHz

RDS on the MPX input: Audio = 63.5 kHz

Pilot = 7.5 kHz

RDS = 4.0 kHz

With internal RDS: Audio = 63.5 kHz

Pilot = 7.5 kHz

RDS = 4.0 kHz



Crown Broadcast, a division of International Radio & Electronics Corporation 25166 Leer Drive, Elkhart, Indiana, 46514-5425 USA
Ph +1 (574) 262 8900

Ex 3: inject stereo MPX with:

Audio = 67.5 kHz

Pilot = 7.5 kHz

If the RDS is disabled: Audio = 67.5 kHz

Pilot = 7.5 kHz

With internal RDS: Audio = 67.5 kHz

Pilot = 7.5 kHz

RDS = 4.0 kHz

! ***The total modulation 67,5+7,5+4,0 = 79 kHz is too high!***

### 5.4.9. Stereo Encoder menu

These parameters are available as CODER and CONF serial commands (see sections 6.2.6 and 6.2.3).

**MO/ST** (CODER.MOST) – read/write

With this parameter, set the stereo generator in mono or stereo mode. For mono, there are 3 options: Left channel broadcast in mono (Mono_L), right channel broadcast in mono (Mono_R), the sum Left+Right broadcast in mono (Mono). Otherwise left and right channels are broadcasted in stereo.

STEREO, MONO, MONO_L or MONO_R

**AUDIO CH** (CODER.SELECT.AUDIO) – read only

This parameter indicates the channel used by the modulator for the audio, as set with the INPUT.SELECT menu.

NONE, AUTO, LINE1, LINE2, MPX1, MPX2 or GENE

**PHI 19k** (CONF.PHASE.PILOT) – read/write

With this parameter, set the pilot sub-carrier phase. We recommend setting it at 0°.

From -180° to +180°

**19k OUT LEVEL** (CODER.19KOUT.LEVEL) – read/write

With this parameter, enable/disable the rear panel 19 kHz clock and set its output level. 0=off; between 1 and 7: set a level between 0.9 and 1.1 V peak-to-peak. 5 corresponds to 1 V.

From 0 to 8 V



Crown Broadcast, a division of International Radio & Electronics Corporation 25166 Leer Drive, Elkhart, Indiana, 46514-5425 USA
Ph +1 (574) 262 8900

### 5.4.10. RDS / SCA Encoder menu

These parameters are available as CODER and serial CONF commands (see sections 6.2.6 and 6.2.3) .

**RDS CH** (CODER.CURRENT.RDS) – read only

This parameter indicates the channel used by the modulator for the RDS, as set with the RDS IN parameter.

NONE, MPX1, MPX2 or INTERNAL

**RDS STATE** (CONF. STATE.RDS) – read/write

With this parameter, enable or disable the RDS. When the RDS is enabled or disabled, the RDS deviation is automatically subtracted from or added to the audio deviation to maintain the same total deviation.

Off/On

**RDS IN** (CODER.SELECT.RDS) – read/write

With this parameter, set the RDS component source of the broadcast signal either with an external source or with the internal encoder.

MPX1, MPX2 or INTERNAL

**PHI RDS** (CONF.PHASE.RDS) – read/write

With this parameter, set the RDS sub-carrier phase in relation to the pilot sub-carrier. We recommend setting it at 90°.

From -180° to +180°

**SCA STATE** (CONF. STATE.SCA) – read/write

With this parameter, enable or disable the SCA. When the SCA is enabled or disabled, the SCA deviation is automatically subtracted from or added to the audio deviation to maintain the same total deviation.

Off/On

**SCA IN** (CODER.SELECT.SCA) – read/write

With this parameter, set the SCA component source of the broadcast signal

MPX1 or MPX2

### 5.4.11. FME Limiter menu

These parameters are available as CONF serial commands (see section 6.2.3).

Without the FME Limiter option, the CLIP parameter is the only available parameter.


Crown Broadcast, a division of International Radio & Electronics Corporation 25166 Leer Drive, Elkhart, Indiana, 46514-5425 USA
Ph +1 (574) 262 8900

**CLIP** (CONF.DEV.CLIP) – read/write

With this parameter, set the MPX hard clipper to prevent any possibility of over-modulation on the modulator itself. This process is carried out digitally right before the RF generation and is therefore enabled on all the inputs. If the deviation is greater than the configured value (in kHz), the MPX hard clipper is automatically enabled. Unlike FME limiters/clippers used in audio processing, this clipper cannot be used continuously for it generates a noticeable audio distortion. It is therefore best to set it at 0, or at the maximum authorized deviation, plus a few kHz to ensure additional security with the audio processor.

From 0 to 200 kHz

The FME Limiter option includes 3 processing stages:

- AGC: The Automatic Gain Control purpose is to compensate level variations applied to the selected audio input. The algorithm is wide-band for maximum audio fidelity and gated to avoid noise and unwanted level corrections.
- FME LIMITER: The FME Limiter prevents from over-modulation by limiting the audio peaks.
- MPX POWER LIMITER: The MPX Power Limiter is based on to the ITU-R 412 standard applied on some FME markets.

**CLIP STATE** (CONF.STATE.CLIP) – read/write

This parameter enables or disables the clipper. Default: off.

Off/On

**CLIP** (CONF.DEV.CLIP) – read/write

Set in kHz, this parameter represents the maximum FM deviation and is used as a reference by the FM Limiter algorithm. Default value: 75 kHz.

From 0 to 150 kHz

**AGC STATE** (CONF.AGC.STATE) – read/write

This parameter enables or disables the Automatic Gain Control processing stage. Default: off.

Off/On

**AGC DRIVE** (CONF.AGC.DRIVE) – read/write

With this parameter, load more or less the AGC input. At 0 dB gain reduction will be applied when the transmitter is fed by an audio level higher than the input level setting. Increasing the drive will add gain reductions, while low audio levels will be increased (more processed). Default value: +4 dB.

From 0 to 12 dBu

**AGC ATTACK** (CONF.AGC.ATT) – read/write

With this parameter, tune in dB/s the AGC reactivity speed to a volume increase. A high setting is recommended to protect the FM limiter stage against high audio levels and possible audio distortions. Default value: 8641dB/s

From 0.1 to 10 000 dB/s


Crown Broadcast, a division of International Radio & Electronics Corporation 25166 Leer Drive, Elkhart, Indiana, 46514-5425 USA
Ph +1 (574) 262 8900

**AGC RELEASE** (CONF.AGC.REL) – read/write

With this parameter, tune in dB/s the AGC correction speed to a volume decrease. A low setting is recommended to slowly increase the gain in case of low audio level and maintain maximum audio fidelity. Set this parameter to 1dB/s or lower for more transparency; 2 or 3 dB/s will give a slightly more processed result. Default value: 1 dB/s

From 0 to 6 dB/s

**AGC GATE THRESHOLD** (CONF.AGC.THR) – read/write

This threshold will freeze the AGC operation when the audio level is below the user-set limit. This function limits floor noise and prevents unwanted AGC processing on the audio. Default value: -20 dB

From -100 to 0 dB

**LIMITER STATE** (CONF.STATE.LIMIT) – read/write

This parameter enables or disables the FM Limiter stage. Default: off.

Off/On

**LIMITER DRIVE** (CONF.DRIVE.LIMIT) – read/write

With this parameter, load more or less the FM limiter input. CAUTION: Always be aware that increasing the FM limiter drive may lead to noticeable distortion. Setting the limiter drive at 0 dB is recommended to use the FM Limiter as a protection stage against over-modulation.

From 0 to 1 dB

**MPX POWER LIMITER STATE** (CONF.STATE.MPXPWR) – read/write

This parameter enables or disables the MPX Power Limiter processing stage. Do not activate the MPX power reduction if no standard requires you to do it. It could have a negative impact on the sought after sound level. Default: off.

Off/On

**MPX POWER LIMITER LEVEL** (CONF.DEV.MPXPWR) – read/write

Set the maximum authorized MPX Power. Default value: 3 dB.

From -3 to -10 dB

### 5.4.12. RDS menu

With the Basic RDS option, configure up to 2 DSNs each with a main PSN. Among other things, the DSNs allow fast and easy changing of the encoder settings remotely.

Note: the RDS is enabled in the RDS/SCA ENCODER menu.

These parameters are available as RDS serial commands (see section 6.2.7).


Crown Broadcast, a division of International Radio & Electronics Corporation 25166 Leer Drive, Elkhart, Indiana, 46514-5425 USA
Ph +1 (574) 262 8900

**CURRENT MAIN** (RDS.DSN)

This parameter indicates the current DSN number.

***MAIN DSN sub-menu***

**PI** (RDS.MAINDSN.PI) – read/write

With this parameter, set the PI code (Program Identifier) used by RDS receivers to identify the station while searching for a frequency using AF or EON-AF codes.

4-digit hexadecimal code

**PTY** (RDS.MAINDSN.PTY) – read/write

With this parameter, set the PTY (Program Type). Select on 32 RDS or RDBS preset codes as given in the table below.

From 0 to 31 as indicated on the table

| PTY code | RDS Program type (EU) | RBDS Program type (USA) |
|---|---|---|
| 0 | No program type or undefined | No program type or undefined |
| 1 | News | News |
| 2 | Current affairs | Information |
| 3 | Information | Sports |
| 4 | Sport | Talk |
| 5 | Education | Rock |
| 6 | Drama | Classic Rock |
| 7 | Culture | Adult Hits |
| 8 | Science | Soft Rock |
| 9 | Varied | Top 40 |
| 10 | Pop Music | Country |
| 11 | Rock Music | Oldies |
| 12 | M.O.R. Music | Soft |
| 13 | Light classical | Nostalgia |
| 14 | Serious classical | Jazz |
| 15 | Other Music | Classical |
| 16 | Weather | Rhythm and Blues |
| 17 | Finance | Soft Rhythm and Blues |
| 18 | Children’s programs | Language |
| 19 | Social Affairs | Religious Music |


Crown Broadcast, a division of International Radio & Electronics Corporation 25166 Leer Drive, Elkhart, Indiana, 46514-5425 USA
Ph +1 (574) 262 8900

| | | |
|---|---|---|
| 20 | Religion | Religious Talk |
| 21 | Phone In | Personality |
| 22 | Travel | Public |
| 23 | Leisure | College |
| 24 | Jazz Music | Unassigned |
| 25 | Country Music | Unassigned |
| 26 | National Music | Unassigned |
| 27 | Oldies Music | Unassigned |
| 28 | Folk Music | Unassigned |
| 29 | Documentary | Weather |
| 30 | Alarm Test | Emergency Test |
| 31 | Alarm | Emergency |

**PS** (RDS.MAINDSN.PS) – read/write

With this parameter, set the PS (Program Station).

8-digit code

**MS** (RDS.MAINDSN.MS) – read/write

With this parameter, indicate whether the program is Music or Speech to automatically adjust the sound level of the RDS receiver.

0 (music) or 1 (speech)

**DI** (RDS.MAINDSN.DI) – read/write

With this parameter, set the DI (Decoder Identification) which enables an RDS receiver's audio level to be adjusted according to the type of received audio (mono or stereo, static or dynamic PTY, compressed or not, with or without artificial head).

From 0 to 15, as indicated in the table on the next page


Crown Broadcast, a division of International Radio & Electronics Corporation 25166 Leer Drive, Elkhart, Indiana, 46514-5425 USA
Ph +1 (574) 262 8900

| | Mono / Stereo | With / Without artificial head | Compressed / non compressed | static / dynamic PTY |
|---|---|---|---|---|
| 0 | mono | without | non | static |
| 1 | mono | without | non | dynamic |
| 2 | mono | without | compressed | static |
| 3 | mono | without | compressed | dynamic |
| 4 | mono | with | non | static |
| 5 | mono | with | non | dynamic |
| 6 | mono | with | compressed | static |
| 7 | mono | with | compressed | dynamic |
| 8 | stereo | without | non | static |
| 9 | stereo | without | non | dynamic |
| 10 | stereo | without | compressed | static |
| 11 | stereo | without | compressed | dynamic |
| 12 | stereo | with | non | static |
| 13 | stereo | with | non | dynamic |
| 14 | stereo | with | compressed | static |
| 15 | stereo | with | compressed | dynamic |

**TA/TP** (RDS.MAINDSN.TATP / RDS.MAINDSN.TA / RDS.MAINDSN.TA) – read/write

With this parameter, enable or disable the TA (Traffic Announcement) / TP (Traffic Program). Enabling the TA instantaneously switches an RDS receiver onto road information reports; at the end of the report, the receiver will automatically go back to its former operating state. Enabling the TP shows RDS receivers that the allocated station is likely to broadcast road information. You may enable both the TA and the TP, the TP only or neither.

TATP, TP or OFF

**AF** (RDS.MAINDSN.AF) – read/write

With this parameter, set up to 25 alternative frequencies in MHz with the method A. An RDS receiver will shift to an alternative frequency when the set frequency is no longer properly received.

XX;XX; …;XX

**RT** (RDS.MAINDSN.RT) – read/write

With this parameter, display and set the radiotext, function which enables text messages to be broadcast in groups of 64 characters. The RDS receiver can only benefit from this function if fitted with a specific display (home receivers, Smartphone mobile receivers). The RT function cannot be used on car radios as road safety commissions have forbidden its use on board a vehicle.


Crown Broadcast, a division of International Radio & Electronics Corporation 25166 Leer Drive, Elkhart, Indiana, 46514-5425 USA
Ph +1 (574) 262 8900

**GS** (RDS.MAINDSN.GS) – read/write

With this parameter, set the group sequence (32 max) which must include at least one group 0A.

XX;XX; …;XX

Parameters of the ALT DSN sub-menu are identical to those of the MAIN DSN sub-menu; for serial commands, use ALT instead of MAIN.



Crown Broadcast, a division of International Radio & Electronics Corporation 25166 Leer Drive, Elkhart, Indiana, 46514-5425 USA
Ph +1 (574) 262 8900

# 6. SERIAL & TELNET COMMANDS

## 6.1. Working principle

Crown Broadcast FME has a serial interface. The physical connection is done using the SUB-D9 (SERIAL MONITOR) on the front panel. A common computer with an RS 232 interface (example: PC+ Windows + Hyper-Terminal) is all you need to send commands. The dialog is in text mode (ASCII) and no specific software is required.

Like all serial PC connected equipment, a good cable and correct communication settings are essential to ensure good communication. The cable must be a straight cable (not crossover), with a female plug to connect to the PC, and male plug to connect to the unit.

To avoid problems during connection, set the same communication speed and identical settings for both devices. See figure 'Port parameters".

| | |
|---|---|
| -> 9600 | Bits per second |
| -> 8 | Data bits |
| -> No | Parity |
| -> 1 | Stop bit |
| -> No | Handshaking |

Commands may also be used in Telnet when the transmitter is fitted with an IP interface.

The commands make it possible to read the functional parameters (R) or even to edit some of them (W).

To retrieve the value of a functional parameter, simply enter the command name and press the <Enter> key.

*Example:*

To display the status of the 3 dB alarm, type:

ALARM.3DB

The answer, ON or OFF will indicate the 3 dB alarm is on or not.

To set a parameter, type the command name, the equal sign, the new value and press the <Enter> key.

*Example:*

To set the transmitter working mode (local or remote), type:

CONF.MODE=LOCAL

The answer: LOCAL will indicate the command has been implemented. In case it has not, the message ERROR CMD will appear.



Crown Broadcast, a division of International Radio & Electronics Corporation 25166 Leer Drive, Elkhart, Indiana, 46514-5425 USA
Ph +1 (574) 262 8900

**Protection with a password:**

By default, there is no protection to send commands.

This can be secured with the command:

SYS.PASSWORD = my_password, where my_password is the password you chose

To connect without a password, enter:

LOGIN

And if a password has been set:

LOGIN = my_password

For Telnet connections, the embedded website identifiers will be requested with the command prompts LOGIN USER and LOGIN PASSWORD (see section 9.6.5).

## 6.2. Serial commands

### 6.2.1. System commands

| NAME | Access (R/W) | Possible value on the serial port of the unit | Comments |
|---|---|---|---|
| LOGIN | R/W | XXXX,X=[0…z] "LOGGED" ou "NOT LOGGED" | Logs the user and allows them to update variables if the password is correct. Returns Logged or not logged |
| LOGOUT | W | | Logs out the user and locks all variables. |
| SYS.CID | R/W | [0..31] | Unit identifier used by the CAN bus. |
| SYS.CIDIP | R/W | [0..31] | Unit identifier used by the IP option CAN bus |
| SYS.CIDUC | R/W | [0..31] | Unit identifier used by the CAN2 bus. |
| SYS.COM1.ECHO | R/W | "ON" or "OFF" | Adds the local echo on the rear panel serial port |
| SYS.COM1.SPEED | R/W | 9600,19200,38400,57600,115200 | Speed of the rear panel serial port 1 |
| SYS.COM2.ECHO | R/W | "ON" or "OFF" | Adds the local echo on the rear panel serial port |
| SYS.COM2.SPEED | R/W | 9600,19200,38400,57600,115200 | Speed of the rear panel serial port 2 |
| SYS.DATE | R/W | DD/MM/YY | Reads and sets the amplifier date |
| SYS.DATECALIB | R | DDMMYYYY | Date of the last calibration |
| SYS.GPIO.CONF1 | R/W | "AMB" or "FAN1" or "VOLT" or "HEAT" or "FAN2" or "CURRENT" or "PWR" | Sets the remote monitoring ANA3 on the optional GPIO Analog board |
| SYS.GPIO.CONF2 | R/W | "AMB" or "FAN1" or "VOLT" or "HEAT" or "FAN2" or "CURRENT" or "PWR" | Sets the remote monitoring ANA4 on the optional GPIO Analog board |
| SYS.GPIO.IN.ACT | R | XX X=[A..F;0..9] | Indicates the corresponding RC when managed manually (see SYS.GPIO.IN.MASK) |
| SYS.GPIO.IN.MASK | R/W | XX X=[A..F;0..9] | Sets the RC control either by the control board or manually. Hexadecimal code: each bit corresponds to an input. Ex: A1 (10100001) indicates the RC 1, 6 and 8 are managed manually |
| SYS.GPIO.OUT.ACT | R/W | XX X=[A..F;0..9] | Enables the corresponding RM when managed manually (see SYS.GPIO.OUT.MASK) |


Crown Broadcast, a division of International Radio & Electronics Corporation 25166 Leer Drive, Elkhart, Indiana, 46514-5425 USA
Ph +1 (574) 262 8900

| NAME | Access (R/W) | Possible value on the serial port of the unit | Comments |
|---|---|---|---|
| SYS.GPIO.OUT.MASK | R/W | XX X=[A..F;0..9] | Sets the RM control either by the control board or manually. Hexadecimal code: each bit corresponds to an input: Ex: 21 (00100001) indicates RM 1 and 6 are managed manually. |
| SYS.HARDREL | R | xx.xx.xx x=[0..9] | Hardware version: example "3.0.1" |
| SYS.IP.ADR | R/W | XXX.XXX.XXX.XXX X=[0…9] | IP address of the optional IP board |
| SYS.IP.GW | R/W | XXX.XXX.XXX.XXX X=[0…9] | Network gateway of the optional IP board |
| SYS.IP.MAC | R/W | XX:XX:XX:XX:XX:XX:XX:XX X=[A..F;0..9] | Mac address of the optional IP board |
| SYS.IP.MASK | R/W | XXX.XXX.XXX.XXX X=[0…9] | IP mask of the optional IP board |
| SYS.KEY.ADD | R/W | ADD | Generates a key to enable the specified option |
| SYS.KEY.REM | R/W | REM | Generates a key to disable the specified option |
| SYS.LCDMENUS | R/W | "NORMAL" or "ADVANCED" | Sets the display type on the front panel screen |
| SYS.LOCALCOM.ECHO | R/W | "ON" or "OFF" | Adds the local echo on the front panel serial port |
| SYS.LOCALCOM.SPEED | R/W | 9600,19200,38400,57600,115200 | Speed of the front panel serial port |
| SYS.LOG | R | | List of the latest 200 events (configuration changes, alarm start date and end date…) |
| SYS.LOG.CLR | W | | Clears the event list |
| SYS.NAME | R/W | XXXX X=[A…Z] | Equipment name |
| SYS.OPT.LIST | R | RF,RC,AIP,TUN,IP,COM,REC | List of implemented options |
| SYS.PASSWORD | R/W | xxx x=[A..Z;0..9] | Password for the console and front panel display. 'NONE' disables the password |
| SYS.PASSWORD.RESET | R/W | xxx x=[A..Z;0..9] | Creates a text string to unlock the password if it has been forgotten |
| SYS.PCAP | R | [0..999] | Nominal power of the unit: example "300"=>300 W |
| SYS.RAZ | W | "RAZ" | Reloads NVRAM default values |
| SYS.RST | W | | Reset of all parameters. |
| SYS.RST.CPU | W | "RST" | General reset of the µc. Sends the return code: RST |
| SYS.SN | R | YYMMXXXX A,M,X=[0..9] | Serial number of the unit: Y => year, M => month, X => number |
| SYS.SOFTREL | R | xx.xx.xx x=[0..9] | Software version: example "3.0.1" |
| SYS.SOFTREL.LIST | R | xx.xx.xx x=[0..9] | List of the exciter software versions CPU;DSP;FPGA;IP;EXC;A/IP;TUN |
| SYS.TIME | R/W | HH:MM:SS | Reads and sets the amplifier time |
| SYS.TYPE | R | xxx x=[A..Z;0..9] | Unit type: example "E20" for E Series 20 W |
| SYS.UPTIME | R | [0..99999999] | Indicates the number of working hours since commissioning |


Crown Broadcast, a division of International Radio & Electronics Corporation 25166 Leer Drive, Elkhart, Indiana, 46514-5425 USA
Ph +1 (574) 262 8900

### 6.2.2. Measurement commands

| NAME | Access (R/W) | Possible value on the serial port of the unit | Comments |
|---|---|---|---|
| MEAS.12V | R | xx.x x=[0..9] | Measures the 12 V voltage |
| MEAS.5V | R | xx.x x=[0..9] | Measures the 5 V voltage |
| MEAS.AMB | R | ±[0..125] | Measures the ambient temperature from 0 to 125°C. "52"=>52°C. |
| MEAS.DEV.PEAK | R | -150,0…150,0 | Gives the peak value for the signal deviation in kHz |
| MEAS.DEV.RMS | R | -150.0…150.0 | Gives the average value for the signal deviation in kHz |
| MEAS.N12V | R | -xx.x x=[0..9] | Measures the -12 V voltage |
| MEAS.PFWD | R | [0..9999] | Measure of forward power. examples: "20" or "300" => 300 W |
| MEAS.PREF | R | xxx.x x=[0..9] | Measure of reflected power: "20" => 2 W |
| MEAS.VSWR | R | XX.X X=[0..9] | VSWR measure "01.0" or "20.0" |
| MEAS.VSWRTRIP | | [0..99] | Gives the number of reflected power safety in the past hour |


Crown Broadcast, a division of International Radio & Electronics Corporation 25166 Leer Drive, Elkhart, Indiana, 46514-5425 USA
Ph +1 (574) 262 8900

### 6.2.3. Configuration commands

| NAME | Access (R/W) | Possible value on the serial port of the unit | Comments |
|---|---|---|---|
| CONF.10M.OPE | R/W | "AUTO or "MANU" | Indicates the operating mode of the external 10 MHz input |
| CONF.AGC.ATT | R/W | [0…32000] | Attack in dB/s |
| CONF.AGC.DRIVE | R/W | [-320,00…320.00] | Drive applied before the AGC |
| CONF.AGC.REL | R/W | [0…50,00] | Release in dB/s |
| CONF.AGC.STATE | R/W | ON/OFF | Enables/disables the AGC function on Line1, Line2 and Player |
| CONF.AGC.THR | R/W | [-70,00…0] | Sets the non-triggering threshold in dB |
| CONF.AMB.MAX | R/W | [0..999] | Sets the triggering threshold for the ambient temperature alarm |
| CONF.CROSSFADE | R/W | 0 to 25.5 | Crossfade between channels (in seconds) |
| CONF.DEV.AUDIO | R/W | 0…150 | Sets the audio excursion |
| CONF.DEV.CLIP | R/W | 0 to 200 | Set the excursion clipping ; +128 = disabled limitation |
| CONF.DEV.LIMIT | R/W | 0 to 200 | Set the MPX excursion limitation; +128 = disabled limitation |
| CONF.DEV.MPX | R/W | 00000 à 150.00 | Sets the MPX excursion |
| CONF.DEV.MPXPWR | R/W | -12.7…12.7 | Set the MPX power limitation; +128 = disabled limitation |
| CONF.DEV.PILOT | R/W | 0 to 25.5 | Sets the pilot excursion |
| CONF.DEV.RDS | R/W | 0 to 25.5 | Sets the RDS excursion |
| CONF.DEV.SCA | R/W | 0 to 25.5 | Sets the SCA excursion |
| CONF.DRIVE.LIMIT | R/W | 0 to 25.5 | Drive value of the FM limiter in dB |
| CONF.HEAT.MAX | R/W | [0..125] | Sets the triggering threshold for the radiator 1 temperature alarm |
| CONF.MODE | R | "LOCAL" or "REMOTE" | Indicates the mode, local or remote |
| CONF.PHASE.PILOT | R/W | -180..+180 | Sets the pilot phase |
| CONF.PHASE.RDS | R/W | -180..+180 | Sets the RDS phase |
| CONF.RF | R/W | ON/OFF | Enables/disables the RF |
| CONF.SBY | R | "ON" or "OFF" | Indicates if the transmitter is in standby mode |
| CONF.STATE.CLIP | R/W | ON/OFF | Enables/disables the Hard Clipper |
| CONF.STATE.LIMIT | R/W | ON/OFF | Enables/disables the FM limiter |
| CONF.STATE.MPXPWR | R/W | ON/OFF | Enables/disables the MPX Power limiter |


Crown Broadcast, a division of International Radio & Electronics Corporation 25166 Leer Drive, Elkhart, Indiana, 46514-5425 USA
Ph +1 (574) 262 8900

### 6.2.4. Transmitter commands

| NAME | Access (R/W) | Possible value on the serial port of the unit | Comments |
|---|---|---|---|
| TX.1DB | R/W | [0..9999] | Sets the triggering threshold for the 1 dB alarm. Example "250" => 250 W |
| TX.3DB | R/W | [0..9999] | Sets the triggering threshold for the 3 dB alarm. Example "250" => 250 W |
| TX.3DB.AUTO | R/W | "ON" or "OFF" | If ON set the 3 dB level to TX.PWR/2. If TX.3DB is modified, switches automatically to OFF |
| TX.ALARM.1DB | R | "ON" or "OFF" | ON => 1 dB alarm, OFF => No alarm. |
| TX.ALARM.3DB | R | "ON" or "OFF" | ON => 3 dB alarm, OFF => No alarm. |
| TX.ALARM.VSWR | R | "ON" or "OFF" | ON => VSWR alarm, OFF => No alarm |
| TX.ALARM.VSWR TRIP | R/W | "ON" or "OFF" | Indicates if there has been a VSWR trip default |
| TX.FAULT | R | "FAULT" or "OK" | Fault state of transmitter |
| TX.FREQ | R/W | 87.5 to 108 | Working frequency of the modulator in MHz. Ex: 102.4 |
| TX.INTERLOCK | R | "CLOSE" or "OPEN" | State of the safety loop |
| TX.LINK | R | "OPEN" or "CLOSE" | State of the CAN bus link |
| TX.MODE | R | "LOCAL" or "REMOTE" | Single transmitter, indicates the local or remote mode |
| TX.NAME | R/W | XXXX X=[A…Z] | Transmitter name |
| TX.OPMODE | R/W | "ON" or "OFF" | Single transmitter control |
| TX.PCAP | R | [0..999] | Amplifier nominal power: example "300"=>300W |
| TX.PFWD | R | [0..9999] | Measure of forward power. examples: "20" or "300" => 300W |
| TX.PREF | R | xxx.x x=[0..9] | Measure of reflected power: "20" => 2W |
| TX.PWR | R/W | [0..9999] | Sets the output power. From "0" .. "9999" |
| TX.RFPRESENT | R | "PRES" or "NOT PRES" | Indicates if the single transmitter output power is present |
| TX.SBY | R/W | "ON" or "OFF" | Enables/disables the standby mode |
| TX.TYPE | R | xxx x=[A..Z;0..9] | System type: example "1000-NT" For a 1000 W transmitter with Nephtys central unit |
| TX.VSWR | R | XX.X X=[0..9] | VSWR measure "01.0" or "20.0" |
| TX.VSWR.MAX | R/W | XX.X X=[0..9] | Sets the triggering threshold for the VSWR alarm. Must be of type "XXX"."020" => VSWR = 2. Do not use "2" or "1.4". |
| TX.VSWRTRIP | R/W | "ON" or "OFF" | Enables/disables reflected power safety |
| TX.WARNING | R | "ON" or "OFF" | Single transmitter. Warning state of single transmitter |


Crown Broadcast, a division of International Radio & Electronics Corporation 25166 Leer Drive, Elkhart, Indiana, 46514-5425 USA
Ph +1 (574) 262 8900

### 6.2.5. Alarm commands

| NAME | Access (R/W) | Possible value on the serial port of the unit | Comments |
|---|---|---|---|
| ALARM.10MSWITCH | R | "ON" or "OFF" | Indicates there was a 10 MHz switch |
| ALARM.1DB | R | "ON" or "OFF" | ON =>1 dB Alarm, OFF => => No alarm |
| ALARM.3DB | R | "ON" or "OFF" | ON =>3 dB Alarm, OFF => => No alarm |
| ALARM.AMB | R | "ON" or "OFF" | ON => ambient alarm, OFF => No alarm. |
| ALARM.BATLOW | R | "ON" or "OFF" | Indicates if the NVRAM battery's level is OK |
| ALARM.CUR1 | R | "ON" or "OFF" | Indicates the PSU 1 current is over the max threshold. |
| ALARM.FAN1 | R | "ON" or "OFF" | Fan 1 alarm; speed is too slow |
| ALARM.FAN2 | R | "ON" or "OFF" | Fan 2 alarm; speed is too slow |
| ALARM.FAULT | R | "ON" or "OFF" | ON => critical alarm OFF => => No alarm (3 dB, VSWR) |
| ALARM.HEAT1 | R | "ON" or "OFF" | ON => radiator temp alarm, OFF => No alarm. |
| ALARM.INPUTSWITCH | R | "ON" or "OFF" | Indicates if the current audio input corresponds to the highest priority channel |
| ALARM.LIST | R | | Returns the list of current alarms in ASCII format |
| ALARM.OVDR | R | "ON" or "OFF" | Indicates whether the input power is too high (ON) or not (OFF) |
| ALARM.PLL | R | "ON" or "OFF" | Indicates whether the PLL is locked (OFF) or unlocked (ON) |
| ALARM.RDSSWITCH | R | "ON" or "OFF" | Indicates there was a RDS switch (auto mode only) |
| ALARM.SUPPLY1 | R | "ON" or "OFF" | PSU 1 state |
| ALARM.TEMP1 | R | "ON" or "OFF" | ON => temp alarm (thermocoupler) OFF => No alarm |
| ALARM.VOLT.AUX | R | "ON" or "OFF" | Indicates if auxiliary voltage is offset by more than 10% of the set value |
| ALARM.VOLT1 | R | "ON" or "OFF" | ON => PSU 1 voltage is offset by more than 10% of the expected value |
| ALARM.VSWR | R | "ON" or "OFF" | ON => VSWR Alarm, OFF => No VSWR alarm |
| ALARM.WARN | R | "ON" or "OFF" | ON =>Internal Alarm (warnings) OFF=> No alarm. (fan, current, voltage, power supply, temperature, radiator, ambient temp) |

### 6.2.6. Input commands

| NAME | Access (R/W) | Possible value on the serial port of the unit | Comments |
|---|---|---|---|
| INPUT.AUDIOGEN.FREQ1 | R/W | 0 ~ 100000.00 | delta phase = freq audio / 200000 |
| INPUT.AUDIOGEN.FREQ2 | R/W | 0 ~ 100000.00 | delta phase = freq audio / 200000 |
| INPUT.AUDIOGEN.LEVEL1 | R/W | -100.00 ~ 12.00 | Audio level |
| INPUT.AUDIOGEN.LEVEL2 | R/W | -100.00 ~ 12.00 | Audio level |
| INPUT.AUDIOGEN.PREAC | R/W | "0" or "50" or "75" | Sets the value of the pre-emphasis |
| INPUT.AUDIOGEN.STATE | R/W | "OFF" or "L" or "R" or "L+R" or "L-R" | Type of generated MPX signal |
| INPUT.LINE1.DRIVE | R/W | -6.00 to 6.00 | Drive setting, allows an increase of the input audio level without changing the deviation setting. |
| INPUT.LINE1.FLT | R/W | "0" or "15" or "16" or "17" | Configuration of the audio filter |


Crown Broadcast, a division of International Radio & Electronics Corporation 25166 Leer Drive, Elkhart, Indiana, 46514-5425 USA
Ph +1 (574) 262 8900

| NAME | Access (R/W) | Possible value on the serial port of the unit | Comments |
|---|---|---|---|
| INPUT.LINE1.LEFT.PEAK | R | -100 … 28 | Gives the left audio input max peak value over 100 milliseconds |
| INPUT.LINE1.LEFT.PKMAX | R | -100 … 28 | Gives the left audio input max peak value over 1 second. |
| INPUT.LINE1.LEVEL | R/W | -20.00...18.00 | Internal numerical gain. For AES, between -20 and 0; for ANA between -18 and +18 |
| INPUT.LINE1.PREAC | R/W | 0;50;75 | Sets the value of the pre-emphasis |
| INPUT.LINE1.PRESENCE | R | "NONE" or "L" or "R" or "L&R" | Indicates audio signals are present on input 1 |
| INPUT.LINE1.RIGHT.PEAK | R | -100 … 28 | Gives the right audio input max peak value over 100 milliseconds |
| INPUT.LINE1.RIGHT.PKMAX | R | -100 … 28 | Gives the right audio input max peak value over 1 second. |
| INPUT.LINE1.SW.BACKDELAY | R/W | XXX=[0…30] | Back delay on the channel with the highest configurable priority. |
| INPUT.LINE1.SW.DELAY | R/W | XXX=[1…120] | Switching delay when loss of audio 1 |
| INPUT.LINE1.SW.PRIO | R/W | 0..7 ; 0=disabled | Priority of each audio channel (7= highest priority) |
| INPUT.LINE1.SW.SILENCE | R/W | "L" or "R" or "ANY" or "BOTH" | Sets on which channel (L,R or L+R) silence detection must be conducted for the audio input 1 |
| INPUT.LINE1.SW.THRESH | R/W | -90…000 | Silence triggering level in dBFS on channel 1 |
| INPUT.LINE1.TRIM | R/W | -3.00 to 3.00 | Sets the offset between left and right channels (+3 = left channel level is 3 dBu higher than right channel level) |
| INPUT.LINE1.TYPE | R | "ANA" or "AES" "OFF" | Indicates the type of audio signals present on input 1 |
| INPUT.LINE2.DRIVE | R/W | -6.00 to 6.00 | Drive setting, allows an increase of the input audio level without changing the deviation setting. |
| INPUT.LINE2.FLT | R/W | 0;1;2 0=15;1=16;2=17 | Configuration of the audio filter |
| INPUT.LINE2.LEFT.PEAK | R | -100 … 28 | Gives the right audio input max peak value over 100 milliseconds |
| INPUT.LINE2.LEFT.PKMAX | R | -100 … 28 | Gives the right audio input max peak value over 1 second. |
| INPUT.LINE2.LEVEL | R/W | -20.00...18.00 | Internal numerical gain. For AES, between -20 and 0; for ANA between -18 and +18 |
| INPUT.LINE2.PREAC | R/W | 0;50;75 | Sets the value of the pre-emphasis |
| INPUT.LINE2.PRESENCE | R | "NONE" or "L" or "R" or "L&R" | Indicates audio signals are present on input 2 |
| INPUT.LINE2.RIGHT.PEAK | R | -100 … 28 | Gives the right audio input max peak value over 100 milliseconds |
| INPUT.LINE2.RIGHT.PKMAX | R | -100 … 28 | Gives the right audio input max peak value over 1 second |
| INPUT.LINE2.SW.BACKDELAY | R/W | XXX=[0…30] | Back delay on the channel with the highest configurable priority. |
| INPUT.LINE2.SW.DELAY | R/W | XXX=[1…120] | Switching delay when loss of audio 2 |
| INPUT.LINE2.SW.PRIO | R/W | 0..7 ; 0=disabled | Priority of each audio channel (7= highest priority) |
| INPUT.LINE2.SW.SILENCE | R/W | "L" or "R" or "ANY" or "BOTH" | Sets on which channel (L,R or L+R) silence detection must be conducted for the audio input 2 |
| INPUT.LINE2.SW.THRESH | R/W | -90…000 | Silence triggering level in dBFS on channel 2 |
| INPUT.LINE2.TRIM | R/W | -3.00 to 3.00 | Sets the offset between left and right channels (+3 = left channel level is 3 dBu higher than right channel level) |
| INPUT.LINE2.TYPE | R | "ANA" or "AES" "OFF" | Indicates the type of audio signals present on input 2 |
| INPUT.MPX.SW.BACKDELAY | R/W | XXX=[0…30] | Back delay on the channel with the highest configurable priority. |


Crown Broadcast, a division of International Radio & Electronics Corporation 25166 Leer Drive, Elkhart, Indiana, 46514-5425 USA
Ph +1 (574) 262 8900

| NAME | Access (R/W) | Possible value on the serial port of the unit | Comments |
|---|---|---|---|
| INPUT.MPX.SW.DELAY | R/W | XXX=[1…120] | Switching delay when loss on the MPX input |
| INPUT.MPX.SW.THRESH | R/W | -90…000 | Silence triggering level in dBFS on MPX 1 |
| INPUT.MPX1.DRIVE | R/W | -6.00 to 6.00 | Drive setting, allows an increase of the input audio level without changing the deviation setting. |
| INPUT.MPX1.LEVEL | R/W | -18.00...+18.00 | Internal numerical gain |
| INPUT.MPX1.PEAK | R | -150…150 | Gives the deviation max peak value of the transmitted signal in kHz over 100 milliseconds |
| INPUT.MPX1.PKMAX | R | -150…150 | Gives the deviation max peak value of the transmitted signal in kHz over 1 second |
| INPUT.MPX1.PRESENCE | R | MO" or "MO+R" or "MO+R+S" or "ST" or "ST+R" or "ST+R+S" | Gives the composition of MPX1 on channel 3. R = RDS ; MO = Mono ; ST = Stereo ; S = SCA |
| INPUT.MPX1.SW.PRIO | R/W | 0..7 ; 0=disabled | Priority of each audio channel (4= highest priority) |
| INPUT.MPX1.TYPE | R/W | "MO" or "ST" or "ST+R+S" or "ST+R" or "RDS" or "RDS+SCA" or "SCA" | Sets the type of signal on the MPX1 input and applies the corresponding filter |
| INPUT.MPX2.DRIVE | R/W | -6.00...6.00 | Drive setting, allows an increase of the input audio level without changing the deviation setting. |
| INPUT.MPX2.LEVEL | R/W | -18.00...+18.00 | Internal numerical gain |
| INPUT.MPX2.PEAK | R | -150…150 | Gives the deviation max peak value of the transmitted signal in kHz over 100 milliseconds |
| INPUT.MPX2.PKMAX | R | -150...150 | Gives the deviation max peak value of the transmitted signal in kHz over 1 second |
| INPUT.MPX2.PRESENCE | R | MO" or "MO+R" or "MO+R+S" or "ST" or "ST+R" or "ST+R+S" | Gives the composition of MPX2 on channel 3. R = RDS ; MO = Mono ; ST = Stereo ; S = SCA |
| INPUT.MPX2.SW.PRIO | R/W | 0..7 ; 0=disabled | Priority of each audio channel (4= highest priority) |
| INPUT.MPX2.TYPE | R/W | "MO" or "ST" or "ST+R+S" or "ST+R" or "RDS" or "RDS+SCA" or "SCA" | Sets the type of signal on the MPX1 input and applies the corresponding filter |
| INPUT.PLAYER.DRIVE | R/W | -6.00 to 6.00 | Drive setting, allows an increase of the input audio level without changing the deviation setting. |
| INPUT.PLAYER.FLT | R/W | 0;1;2 0=15;1=16;2=17 | Configuration of the audio filter |
| INPUT.PLAYER.LEFT.PEAK | R | -100 … 28 | Gives the left audio input max peak value over 100 milliseconds |
| INPUT.PLAYER.LEFT.PKMAX | R | -100 … 28 | Gives the left audio input max peak value over 1 second. |
| INPUT.PLAYER.LEVEL | R/W | -20...0 | Internal numerical gain |
| INPUT.PLAYER.PREAC | R/W | 0;50;75 | Sets the value of the pre-emphasis |
| INPUT.PLAYER.PRESENCE | R | OFF or "L" or "R" or "L&R" | Indicates audio signals are present on the player |
| INPUT.PLAYER.RIGHT.PEAK | R | -100 … 28 | Gives the right audio input max peak value over 100 milliseconds |
| INPUT.PLAYER.RIGHT.PKMAX | R | -100 … 28 | Gives the right audio input max peak value over 1 second. |
| INPUT.PLAYER.SAMPLING | R/W | "44" or "48" or "96" | Sampling frequency of the internal player audio signal |
| INPUT.PLAYER.SW.BACKDELAY | R/W | XXX=[0…30] | Back delay on the channel with the highest configurable priority. |
| INPUT.PLAYER.SW.DELAY | R/W | XXX=[1…120] | Switching delay when loss of audio 1 |
| INPUT.PLAYER.SW.PRIO | R/W | 0..4 ; 0=disabled | Priority of each audio channel (7= highest priority) |
| INPUT.PLAYER.SW.SILENCE | R/W | "L" or "R" or "ANY" or "BOTH" | Sets on which channel (L,R or L+R) silence detection must be conducted for the audio input 1 |
| INPUT.PLAYER.SW.THRESH | R/W | -90…000 | Silence triggering level in dBFS on channel 1 |


Crown Broadcast, a division of International Radio & Electronics Corporation 25166 Leer Drive, Elkhart, Indiana, 46514-5425 USA
Ph +1 (574) 262 8900

| NAME | Access (R/W) | Possible value on the serial port of the unit | Comments |
|---|---|---|---|
| INPUT.PLAYER.TRIM | R/W | -3.00 to 3.00 | Sets the offset between left and right channels (+3 = left channel level is 3 dBu higher than right channel level) |

### 6.2.7. Encoder commands

| NAME | Access (R/W) | Possible value on the serial port of the unit | Comments |
|---|---|---|---|
| CODER.19KOUT.LEVEL | R/W | 0…8; 0=OFF | Enables/disables and sets the rear panel 19 kHz level output |
| CODER.CURRENT.AUDIO | R | "AUTO" or "LINE1" or "LINE2" or "TUNER" or "MPX1" or "MPX2" or "TUNER1" or "TUNER2" or "PLAYER" or "GENE" | Indicates the channel used by the exciter. |
| CODER.CURRENT.RDS | R | "NONE" or "MPX1" or "MPX2" or "TUNER1" or "TUNER2" or "INTERNAL" | Indicates the channel used by the exciter. |
| CODER.CURRENT.SCA | R | "NONE" or "MPX1" or "MPX2" or "TUNER1" or "TUNER2" or "INTERNAL" | Indicates the channel used by the exciter. |
| CODER.MOST | R/W | "STEREO" or "MONO" or "MONO_L" or "MONO_R" | Configuration of the audio on MPX STEREO; MONO;MONO_L |
| CODER.RDS.BACKUP | R/W | "AUTO or "MANU" | RDS is automatically or manually added on loss of RDS in MPX |
| CODER.SELECT.AUDIO | R/W | "AUTO" or "LINE1" or "LINE2" or "TUNER" or "MPX1" or "MPX2" or "TUNER1" or "TUNER2" or "PLAYER" or "GENE" | Imposes a specific input. |
| CODER.SELECT.RDS | R/W | “OFF” or "MPX1" or "MPX2" or "TUNER1" or "TUNER2" or "INTERNAL" | Channel to use, ‘OFF’ disables the RDS |
| CODER.SELECT.SCA | R/W | “OFF” or "MPX1" or "MPX2" or "TUNER1" or "TUNER2" | Channel to use, ‘OFF’ disables the SCA |

### 6.2.8. RDS commands

| NAME | Access (R/W) | Possible value on the serial port of the unit | Comments |
|---|---|---|---|
| PS_TEXT | R/W | ascii [0x21…0x7E] | Dynamically sets the PS text. Text with Tags <ITEM.TITLE>, <ITEM.ARTIST>, … |
| RDS.ALTDSN.AF | R/W | XX,…,XX XX=[87.5 ~108.00] | List of alternative frequencies (26 max). Enter frequencies as 5 character values. Ex: 89.70 or 103.2 |
| RDS.ALTDSN.DI | R/W | 0~15 | Numerical function that drives an RDS receiver’s audio stage to adjust audio decoding depending on the type of audio channel (mono, stereo, ...) |
| RDS.ALTDSN.GS | R/W | XX;;XX XX=service | Group sequence: 0A => 0, 2A=>4, 10A=>20 (32 max) |
| RDS.ALTDSN.ID | R/W | X; X=[1…8] | Indicates which DSN sent by UECP is copied to the ALT memory |


Crown Broadcast, a division of International Radio & Electronics Corporation 25166 Leer Drive, Elkhart, Indiana, 46514-5425 USA
Ph +1 (574) 262 8900

| NAME | Access (R/W) | Possible value on the serial port of the unit | Comments |
|---|---|---|---|
| RDS.ALTDSN.MS | R/W | "0" or "1" | Numerical flag that automatically modifies the sound level of an RDS receiver depending on the broadcast program (1 = music, 0 = speech) |
| RDS.ALTDSN.PI | R/W | XXXX X=[0..9;A…F] | Enables RDS to identify the station when searching the frequency using AF or EON-AF code |
| RDS.ALTDSN.PS | R/W | XXXX X=[0..9;A…Z] | Station name; with 8 characters |
| RDS.ALTDSN.PTY | R/W | 0~31 | Program type as set by the RDS standard |
| RDS.ALTDSN.PTYN | R/W | XXXX X=[0..9;A…Z] | Program type name |
| RDS.ALTDSN.RT | R/W | X..X ; X=[0..9;A..Z] | radiotext |
| RDS.ALTDSN.TATP | R/W | "OFF" or "TA" or "TP" or "TATP" | Enables/disables TA and TP services |
| RDS.APPOINTMENT.STR | R/W | [A…Z] | Sets the command that modifies <APPOINTMENT>; default value: APPOINTEMENT |
| RDS.CHAT.CENTER.STR | R/W | [A…Z] | Sets the command that modifies <CHAT.CENTER>; default value: CHATCENTRE |
| RDS.CHAT.STR | R/W | [A…Z] | Sets the command that modifies <CHAT>; default value: CHAT |
| RDS.DSN | R/W | "MAIN" or "ALT" | transmit the DSN 1 or 2 to the exciter |
| RDS.EMAIL.HOTLINE.STR | R/W | [A…Z] | Sets the command that modifies <EMAIL.HOTLINE>; default value: EMAILHOTLINE |
| RDS.EMAIL.OTHER.STR | R/W | [A…Z] | Sets the command that modifies <EMAIL.OTHER>; default value: EMAILOTHER |
| RDS.EMAIL.STUDIO.STR | R/W | [A…Z] | Sets the command that modifies <EMAIL.STUDIO>; default value: EMAILSTUDIO |
| RDS.GET_DATA.STR | R/W | [A…Z] | Sets the command that modifies <GET_DATA>; default value: GETDATA |
| RDS.IDENTIFIER.STR | R/W | [A…Z] | Sets the command that modifies <IDENTIFIER>; default value: IDENTIFIER |
| RDS.INFO.ADVERTISEMENT.STR | R/W | [A…Z] | Sets the command that modifies <INFO.ADVERTISEMENT>; default value: ADVERTISEMENT |
| RDS.INFO.ALARM.STR | R/W | [A…Z] | Sets the command that modifies <INFO.ALARM>; default value: ALARMINFO |
| RDS.INFO.CINEMA.STR | R/W | [A…Z] | Sets the command that modifies <INFO.CINEMA>; default value: CINEMA |
| RDS.INFO.DAILY_DIVERSION.STR | R/W | [A…Z] | Sets the command that modifies <INFO.DAILY_DIVERSION>; default value: DAILYDIVERSION |
| RDS.INFO.DATE_TIME.STR | R/W | [A…Z] | Sets the command that modifies <INFO.DATE_TIME>; default value: DATETIME |
| RDS.INFO.EVENT.STR | R/W | [A…Z] | Sets the command that modifies <INFO.EVENT>; default value: EVENT |
| RDS.INFO.HEALTH.STR | R/W | [A…Z] | Sets the command that modifies <INFO.HEALTH>; default value: HEALTH |
| RDS.INFO.HOROSCOPE.STR | R/W | [A…Z] | Sets the command that modifies <INFO.HOROSCOPE>; default value: HOROSCOPE |
| RDS.INFO.LOTTERY.STR | R/W | [A…Z] | Sets the command that modifies <INFO.LOTTERY>; default value: LOTTERY |
| RDS.INFO.NEWS.LOCAL.STR | R/W | [A…Z] | Sets the command that modifies <INFO.NEWS.LOCAL>; default value: LOCALNEWS |


Crown Broadcast, a division of International Radio & Electronics Corporation 25166 Leer Drive, Elkhart, Indiana, 46514-5425 USA
Ph +1 (574) 262 8900

| NAME | Access (R/W) | Possible value on the serial port of the unit | Comments |
|---|---|---|---|
| RDS.INFO.NEWS.STR | R/W | [A…Z] | Sets the command that modifies <INFO.NEWS>; default value: NEWS |
| RDS.INFO.OTHER.STR | R/W | [A…Z] | Sets the command that modifies <INFO.OTHER>; default value: OTHER |
| RDS.INFO.SCENE.STR | R/W | [A…Z] | Sets the command that modifies <INFO.SZENE>; default value: SCENE |
| RDS.INFO.SPORT.STR | R/W | [A…Z] | Sets the command that modifies <INFO.SPORT>; default value: SPORT |
| RDS.INFO.STOCKMARKET.STR | R/W | [A…Z] | Sets the command that modifies <INFO.STOCKMARKET>; default value: STOCKMARKET |
| RDS.INFO.TRAFFIC.STR | R/W | [A…Z] | Sets the command that modifies <INFO.TRAFFIC>; default value: TRAFFIC |
| RDS.INFO.TV.STR | R/W | [A…Z] | Sets the command that modifies <INFO.TV>; default value: TVINFO |
| RDS.INFO.URL.STR | R/W | [A…Z] | Sets the command that modifies <INFO.URL>; default value: URLINFO |
| RDS.INFO.WEATHER.STR | R/W | [A…Z] | Sets the command that modifies <INFO.WEATHER> ; ; default value: WEATHER |
| RDS.ITEM.ALBUM.STR | R/W | [A…Z] | Sets the command that modifies <ITEM.ALBUM>; default value: ALBUMNAME |
| RDS.ITEM.ARTIST.STR | R/W | [A…Z] | Sets the command that modifies <ITEM.ARTIST>; default value: ARTISTNAME |
| RDS.ITEM.BAND.STR | R/W | [A…Z] | Sets the command that modifies <ITEM.BAND>; default value: BAND |
| RDS.ITEM.COMMENT.STR | R/W | [A…Z] | Sets the command that modifies <ITEM.COMMENT>; default value: COMMENT |
| RDS.ITEM.COMPOSER.STR | R/W | [A…Z] | Sets the command that modifies <ITEM.COMPOSER>; default value: COMPOSER |
| RDS.ITEM.COMPOSITION.STR | R/W | [A…Z] | Sets the command that modifies <ITEM.COMPOSITION>; default value: COMPOSITION |
| RDS.ITEM.CONDUCTOR.STR | R/W | [A…Z] | Sets the command that modifies <ITEM.CONDUCTOR>; default value: CONDUCTOR |
| RDS.ITEM.DURATION.STR | R/W | [A…Z] | Sets the command that modifies <ITEM.DURATION>; default value: DURATION |
| RDS.ITEM.GENRE.STR | R/W | [A…Z] | Sets the command that modifies <ITEM.GENRE>; default value: GENRE |
| RDS.ITEM.MOVEMENT.STR | R/W | [A…Z] | Sets the command that modifies <ITEM.MOVEMENT>; default value: MOVEMENT |
| RDS.ITEM.TITLE.STR | R/W | [A…Z] | Sets the command that modifies <ITEM.TITLE>; default value: SONGTITLE |
| RDS.ITEM.TRACKNUMBER.STR | R/W | [A…Z] | Sets the command that modifies <ITEM.TRACKNUMBER>; default value: TRACKNUMBER |
| RDS.MAINDSN.AF | R/W | XX,…,XX XX=[87.5 ~108.0] | List of alternative frequencies (26 max). Enter frequencies as 5 character values. Ex: 89.70 or 103.2 |
| RDS.MAINDSN.DI | R/W | 0~15 | Numerical function that drives an RDS receiver's audio stage to adjust audio decoding depending on the type of audio channel (mono, stereo, ...) |
| RDS.MAINDSN.GS | R/W | XX;;XX XX=service | Group sequence: 0A => 0, 2A=>4, 10A=>20 (32 max) |
| RDS.MAINDSN.ID | R/W | X; X=[1…8] | Indicates which DSN sent by UECP is copied to the MAIN memory |
| RDS.MAINDSN.MS | R/W | "0" or "1" | Numerical flag that automatically modifies the sound level of an RDS receiver depending on the broadcast program (1 = music, 0 = speech) |


Crown Broadcast, a division of International Radio & Electronics Corporation 25166 Leer Drive, Elkhart, Indiana, 46514-5425 USA
Ph +1 (574) 262 8900

| NAME | Access (R/W) | Possible value on the serial port of the unit | Comments |
|---|---|---|---|
| RDS.MAINDSN.PI | R/W | XXXX X=[0..9;A…F] | Enables RDS to identify the station when searching the frequency using AF or EON-AF code |
| RDS.MAINDSN.PS | R/W | XXXX X=[0..9;A…Z] | Station name; with 8 characters |
| RDS.MAINDSN.PTY | R/W | 0~31 | Program type as set by the RDS standard |
| RDS.MAINDSN.PTYN | R/W | XXXX X=[0..9;A…Z] | Program type name |
| RDS.MAINDSN.RT | R/W | X..X ; X=[0..9;A..Z] | radiotext |
| RDS.MAINDSN.TATP | R/W | "OFF" or "TA" or "TP" or "TATP" | Enables/disables TA and TP services |
| RDS.MMS.OTHER.STR | R/W | [A…Z] | Sets the command that modifies <MMS.OTHER>; default value: MMSOTHER |
| RDS.PHONE.HOTLINE.STR | R/W | [A…Z] | Sets the command that modifies <PHONE.HOTLINE>; default value: PHONEHOTLINE |
| RDS.PHONE.OTHER.STR | R/W | [A…Z] | Sets the command that modifies <PHONE.OTHER>; default value: PHONEOTHER |
| RDS.PHONE.STUDIO.STR | R/W | [A…Z] | Sets the command that modifies <PHONE.STUDIO>; default value: PHONESTUDIO |
| RDS.PLACE.STR | R/W | [A…Z] | Sets the command that modifies <PLACE>; default value: PLACE |
| RDS.PROGRAM.EDITORIAL_STAFF.STR | R/W | [A…Z] | Sets the command that modifies <PROGRAMME.EDITORIAL_STAFF>; default value: EDITORIALSTAFF |
| RDS.PROGRAM.HOMEPAGE.STR | R/W | [A…Z] | Sets the command that modifies <PROGRAMME.HOMEPAGE>; default value: HOMEPAGE |
| RDS.PROGRAM.HOST.STR | R/W | [A…Z] | Sets the command that modifies <PROGRAMME.HOST>; default value: PROGRAMMEHOST |
| RDS.PROGRAM.NEXT.STR | R/W | [A…Z] | Sets the command that modifies <PROGRAMME.NEXT>; default value: PROGRAMMENEXT |
| RDS.PROGRAM.NOW.STR | R/W | [A…Z] | Sets the command that modifies <PROGRAMME.NOW>; default value: PROGRAMMENOW |
| RDS.PROGRAM.PART.STR | R/W | [A…Z] | Sets the command that modifies <PROGRAMME.PART>; default value: PROGRAMMEPART |
| RDS.PROGRAM.SUBCHANNEL.STR | R/W | [A…Z] | Sets the command that modifies <PROGRAMME.SUBCHANNEL>; default value: SUBCHANNEL |
| RDS.PROGRAMME.FREQUENCY.STR | R/W | [A…Z] | Sets the command that modifies <PROGRAMME.FREQUENCY>; default value: FREQUENCY |
| RDS.PS1.CENTER | R/W | ON/OFF | Centered text |
| RDS.PS1.DELAY | R/W | 0…99 | Delay between 2 consecutive screens |
| RDS.PS1.EN | R/W | ON/OFF | Enables/disables string1 |
| RDS.PS1.INCREMENT | R/W | [0…8] | Increment type of the frame. 0 = Word |
| RDS.PS1.REP | R/W | 0,,,16 | Sets the number of repetition of string1. 0=infinite |
| RDS.PS1.TEXT | R/W | ascii [0x21…0x7E] | Dynamically sets the 1st PS scroll line. Text with Tags <ITEM.TITLE>, <ITEM.ARTIST>, … |
| RDS.PS1.TRUNCATE | R/W | ON/OFF | Truncated text |
| RDS.PS2.CENTER | R/W | ON/OFF | Centered text |
| RDS.PS2.DELAY | R/W | 0…99 | Delay between 2 consecutive screens |
| RDS.PS2.EN | R/W | ON/OFF | Enables/disables string2 |
| RDS.PS2.INCREMENT | R/W | [0…8] | Increment type of the frame. 0 = Word |


Crown Broadcast, a division of International Radio & Electronics Corporation 25166 Leer Drive, Elkhart, Indiana, 46514-5425 USA
Ph +1 (574) 262 8900

| NAME | Access (R/W) | Possible value on the serial port of the unit | Comments |
|---|---|---|---|
| RDS.PS2.REP | R/W | 0,,,16 | Sets the number of repetition of string1. 0=infinite |
| RDS.PS2.TEXT | R/W | ascii [0x21…0x7E] | Dynamically sets the 2nd PS scroll line. Text with Tags <ITEM.TITLE>, <ITEM.ARTIST>, … |
| RDS.PS2.TRUNCATE | R/W | ON/OFF | Truncated text |
| RDS.PS3.CENTER | R/W | ON/OFF | Centered text |
| RDS.PS3.DELAY | R/W | 0…99 | Delay between 2 consecutive screens |
| RDS.PS3.EN | R/W | ON/OFF | Enables/disables string3 |
| RDS.PS3.INCREMENT | R/W | [0…8] | Increment type of the frame. 0 = Word |
| RDS.PS3.REP | R/W | 0,,,16 | Sets the number of repetition of string1. 0=infinite |
| RDS.PS3.TEXT | R/W | [0x21…0x7E] | Dynamically sets the 3rd PS scroll line. Text with Tags <ITEM.TITLE>, <ITEM.ARTIST>, … |
| RDS.PS3.TRUNCATE | R/W | ON/OFF | Truncated text |
| RDS.PS4.CENTER | R/W | ON/OFF | Centered text |
| RDS.PS4.DELAY | R/W | 0…99 | Delay between 2 consecutive screens |
| RDS.PS4.EN | R/W | ON/OFF | Enables/disables string4 |
| RDS.PS4.INCREMENT | R/W | [0…8] | Increment type of the frame. 0 = Word |
| RDS.PS4.REP | R/W | 0,,,16 | Sets the number of repetition of string1. 0=infinite |
| RDS.PS4.TEXT | R/W | [0x21…0x7E] | Dynamically sets the 4th PS scroll line. Text with Tags <ITEM.TITLE>, <ITEM.ARTIST>, … |
| RDS.PS4.TRUNCATE | R/W | ON/OFF | Truncated text |
| RDS.PS5.CENTER | R/W | ON/OFF | Centered text |
| RDS.PS5.DELAY | R/W | 0…99 | Delay between 2 consecutive screens |
| RDS.PS5.EN | R/W | ON/OFF | Enables/disables string5 |
| RDS.PS5.INCREMENT | R/W | [0…8] | Increment type of the frame. 0 = Word |
| RDS.PS5.REP | R/W | 0,,,16 | Sets the number of repetition of string1. 0=infinite |
| RDS.PS5.TEXT | R/W | [0x21…0x7E] | Dynamically sets the 5th PS scroll line. Text with Tags <ITEM.TITLE>, <ITEM.ARTIST>, … |
| RDS.PS5.TRUNCATE | R/W | ON/OFF | Truncated text |
| RDS.PS6.CENTER | R/W | ON/OFF | Centered text |
| RDS.PS6.DELAY | R/W | 0…99 | Delay between 2 consecutive screens |
| RDS.PS6.EN | R/W | ON/OFF | Enables/disables string6 |
| RDS.PS6.INCREMENT | R/W | [0…8] | Increment type of the frame. 0 = Word |
| RDS.PS6.REP | R/W | 0,,,16 | Sets the number of repetition of string1. 0=infinite |
| RDS.PS6.TEXT | R/W | [0x21…0x7E] | Dynamically sets the 6th PS scroll line. Text with Tags <ITEM.TITLE>, <ITEM.ARTIST>, … |
| RDS.PS6.TRUNCATE | R/W | ON/OFF | Truncated text |
| RDS.PURCHASE.STR | R/W | [A…Z] | Sets the command that modifies <PURCHASE>; default value: PURCHASE |
| RDS.SMS.OTHER.STR | R/W | [A…Z] | Sets the command that modifies <SMS.OTHER>; default value: SMSOTHER |
| RDS.SMS.STUDIO.STR | R/W | [A…Z] | Sets the command that modifies <SMS.STUDIO>; default value: SMSSTUDIO |
| RDS.STATIONNAME.LONG.STR | R/W | [A…Z] | Sets the command that modifies <STATIONNAME.LONG>; default value: STATIONNAMELONG |
| RDS.STATIONNAME.SHORT.STR | R/W | [A…Z] | Sets the command that modifies <STATIONNAME.SHORT>; default value: STATIONNAMESHORT |
| RDS.VOTE.CENTER.STR | R/W | [A…Z] | Sets the command that modifies <VOTE.CENTER>; default value: VOTECENTRE |
| RDS.VOTE.QUESTION.STR | R/W | [A…Z] | Sets the command that modifies <VOTE.QUESTION>; default value: VOTEQUESTION |


Crown Broadcast, a division of International Radio & Electronics Corporation 25166 Leer Drive, Elkhart, Indiana, 46514-5425 USA
Ph +1 (574) 262 8900

### 6.2.9. Status commands

| NAME | Access (R/W) | Possible value on the serial port of the unit | Comments |
|---|---|---|---|
| STAT.10M | R | "PRES" or "NOT PRES" | Indicates the presence of an external 10 MHz |
| STAT.1PPS | R | "LOCK" or "UNLOCK" | Indicates the presence of an external 1 PPS |
| STAT.CLK | R | "INTERNAL" or "EXTERNAL" | Indicates the 10 MHz switch position |
| STAT.CURRENT.IN | R | "1+OPT" or "1+2" or "2+OPT" | Indicates the channels used for channels 1 and 2 |
| STAT.DCOK1 | R | "ON" or "OFF" | Indicates if the PSU 1 of the amplifier is "ON" or "OFF" |
| STAT.DCOK2 | R | "ON" or "OFF" | Indicates if the PSU 2 of the amplifier is "ON" or "OFF" |
| STAT.DCOK3 | R | "ON" or "OFF" | Indicates if the PSU 3 of the amplifier is "ON" or "OFF" |
| STAT.DCOK4 | R | "ON" or "OFF" | Indicates if the PSU 4 of the amplifier is "ON" or "OFF" |
| STAT.INTERLOCK | R | "CLOSE" or "OPEN" | State of the safety loop |
| STAT.LINK | R | "OPEN" or "CLOSE" | State of the CAN bus link |
| STAT.PLL | R | "LOCK" or "UNLOCK" | Indicates the state of the exciter PLL |
| STAT.SECPIN | R | "ON" or "OFF" | Indicates if the input power is greater than the hardware threshold |
| STAT.SECPREF | R | "ON" or "OFF" | Indicates if the reflective protection is enabled |
| STAT.SECTEMP | R | "ON" or "OFF" | State of the temperature safety |
| STAT.SWRF | R | "ON" or "OFF" | State of the RF switch |

### 6.2.10. Communication board commands

| NAME | Access (R/W) | Possible value on the serial port of the unit | Comments |
|---|---|---|---|
| CAN | R/W | ID,CMD,DATA ; ID=[0…9]; CMD=[0…FF] DATA=[0..9 ; A…Z]" | Gateway between the serial port and the CAN bus. ID=recipient's address; TABLE=table containing the command; CMD=command number; DATA=parameter value. The list of tables/commands is available on request. |
| CAN.SCAN | R/W | | Returns the list of units present of the CAN bus. |

Commands related to options are only available when the option is present.


Crown Broadcast, a division of International Radio & Electronics Corporation 25166 Leer Drive, Elkhart, Indiana, 46514-5425 USA
Ph +1 (574) 262 8900

# 7. CONFIGURATION WITH THE PC APPLICATION

## 7.1. Overview

The Crown Broadcast CD includes the Engi application which enables the transmitter's configuration with a simple serial connection to a PC.

On the transmitter's page, click the control interface link to download the zipped file to your PC.

Extract the .exe file. You do not need to install it. Simply double-click on ENGI_REV_xxx.exe to launch the application.

Connect the Crown Broadcast Transmitter front or rear panel serial port to a RS-232 port on the PC using a straight cable with a female connector for the PC and a male connector for the transmitter, or if the IP optional board is present on the Crown Broadcast, connect both the transmitter and the PC to the network.

## 7.2. Using the application

### 7.2.1. Connection

After launching the application, the connection window pops up.

For a serial connection, select the PC COM port and set the rate at 9600 bauds, and indicate which port is used.

If the transmitter is fitted with an IP interface, you can connect remotely. Select TELNET and enter the unit IP address, user name and password as you would to access the embedded web site (see section 9.6.5).

Click the "OK" button.

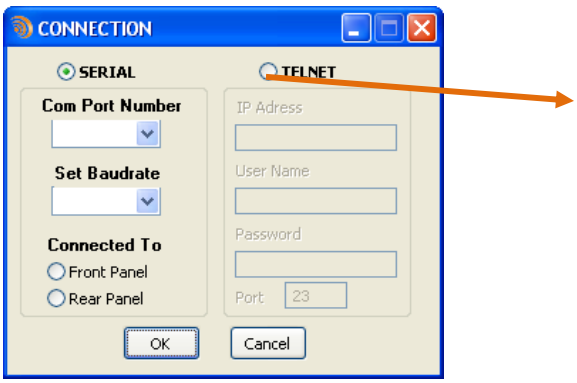



Crown Broadcast, a division of International Radio & Electronics Corporation 25166 Leer Drive, Elkhart, Indiana, 46514-5425 USA
Ph +1 (574) 262 8900

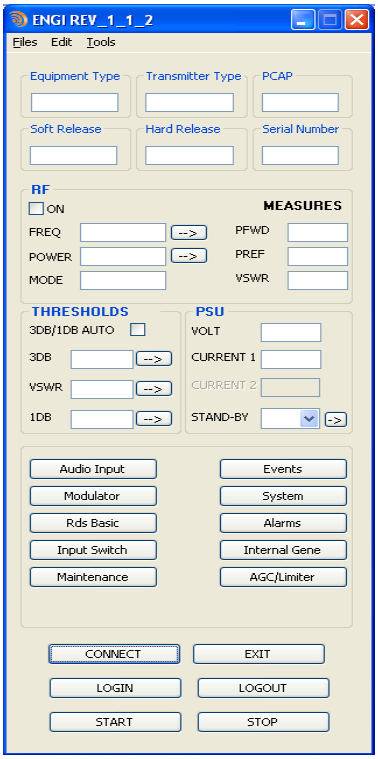


When connected, the unit information is automatically updated.

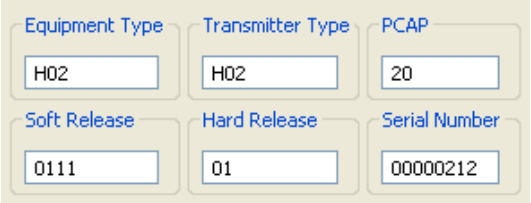


With a serial connection, if the module is password protected, you will need to enter the password before you can access all the functions.

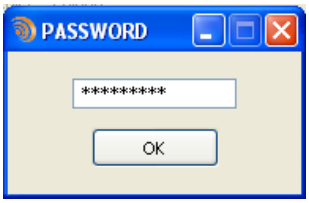



Crown Broadcast, a division of International Radio & Electronics Corporation 25166 Leer Drive, Elkhart, Indiana, 46514-5425 USA
Ph +1 (574) 262 8900

### 7.2.2. Configuration

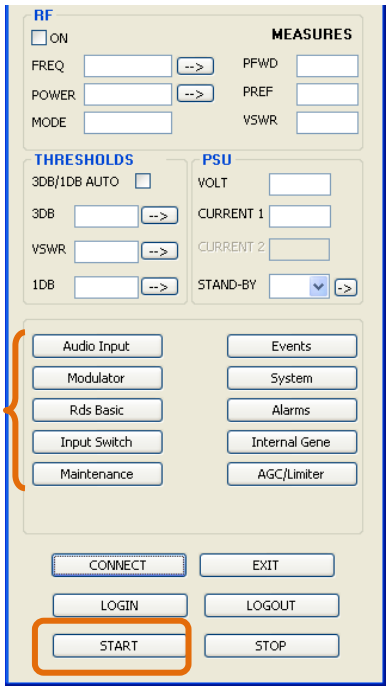


Once connected, click the “Start” button to retrieve RF values and thresholds on the main page.

*These values are also available with the TX Parameters front panel menu or with the TX and CONF serial commands.*

Values that can be set are followed by the button -->. Click this button after having updated a value to send it to the transmitter.

A set of buttons give access to other parameters. Click on one of them to open a window displaying associated parameters.

As long as the application is in “Start” mode, current values are retrieved for all open windows.

Clicking “Stop” prevents retrieval of data; however, sending data to the module remains possible.


Crown Broadcast, a division of International Radio & Electronics Corporation 25166 Leer Drive, Elkhart, Indiana, 46514-5425 USA
Ph +1 (574) 262 8900

## Audio input:

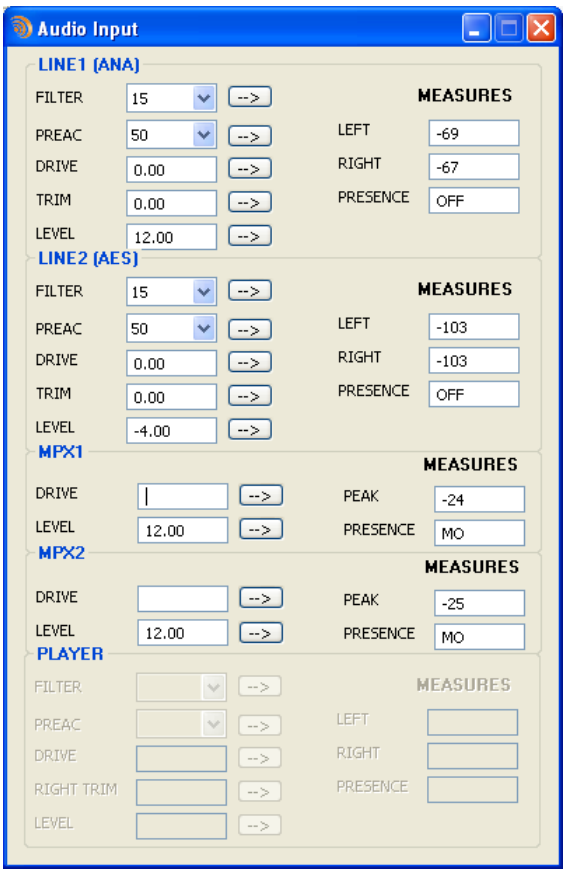


*These values are also available with the Line 1, Line 2, MPX and Player front panel menus or with the INPUT.LINE1, INPUT.LINE2, INPUT.MPX1, INPUT.MPX2 and INPUT.PLAYER serial commands*

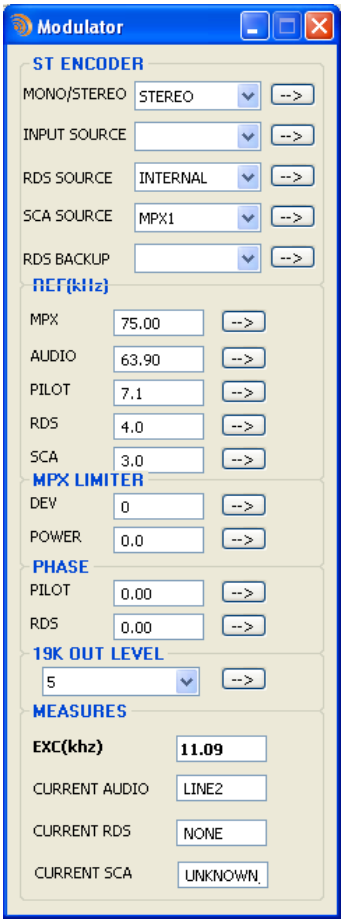


## Modulator:

*These values are also available with the Modulation front panel menu or with the MEAS.DEV and CONF serial commands.*


Crown Broadcast, a division of International Radio & Electronics Corporation 25166 Leer Drive, Elkhart, Indiana, 46514-5425 USA
Ph +1 (574) 262 8900

**Static RDS:**

*These values are also available with the RDS front panel menu or with the RDS serial commands and only it the Basic RDS option is enabled.*

On the Basic RDS page, set the main DSN and the alternate DSN.

On this page, three buttons give you access to PS scroll management. (Not available with the front panel application.)

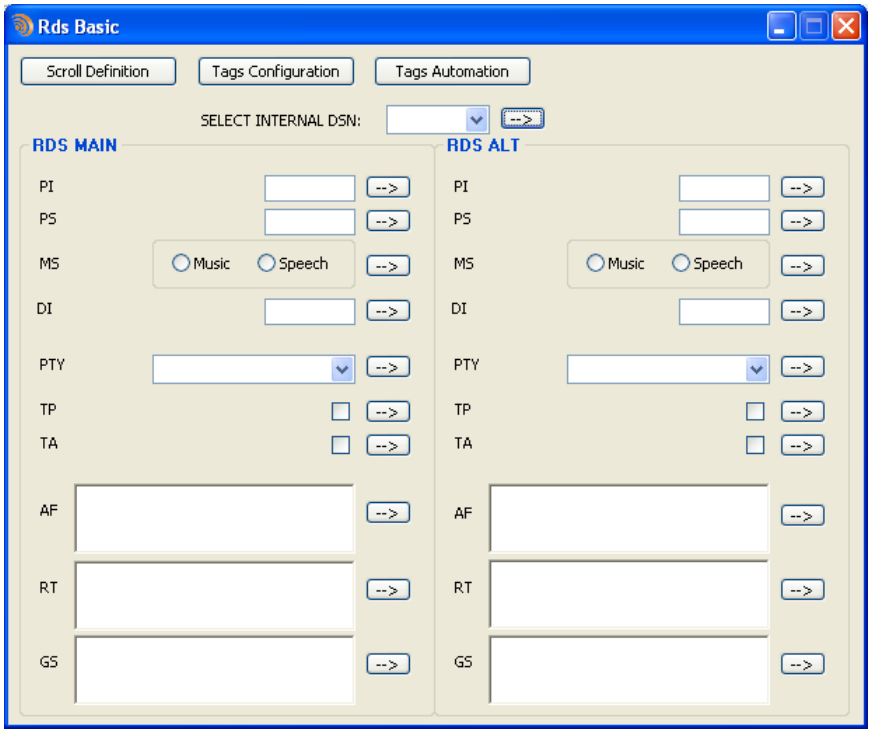


*Scrolling Definition*

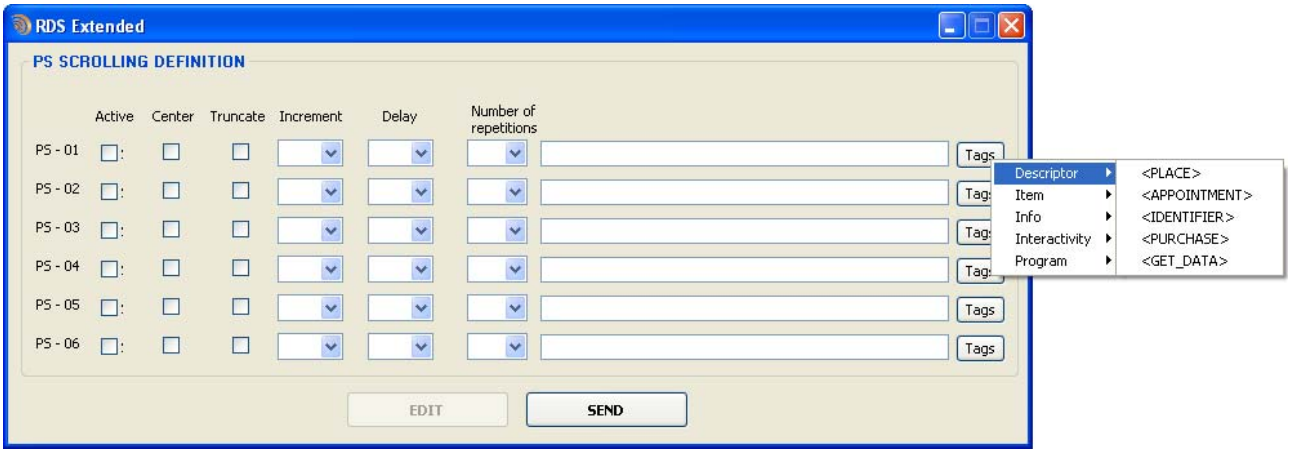



Crown Broadcast, a division of International Radio & Electronics Corporation 25166 Leer Drive, Elkhart, Indiana, 46514-5425 USA
Ph +1 (574) 262 8900

Dynamic fields can be inserted into all PS lines by clicking the 'Tags' button.

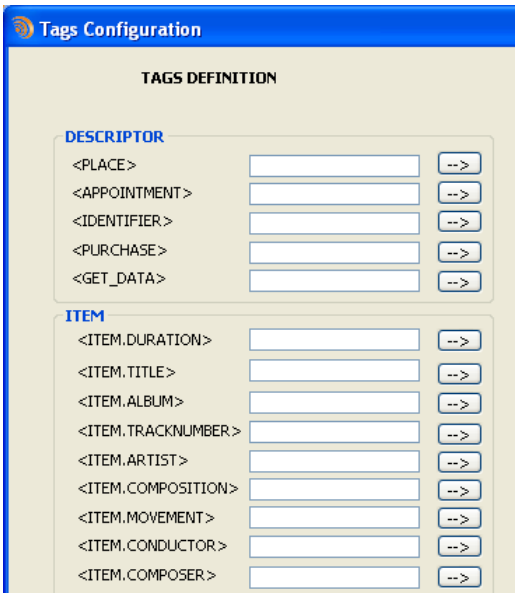


*Tags Configuration*: Current value of dynamic fields.

*Tags Automation*: command definitions for automation software.

See section 9.5.2 for a complete list of tags.

**Input Switch:**

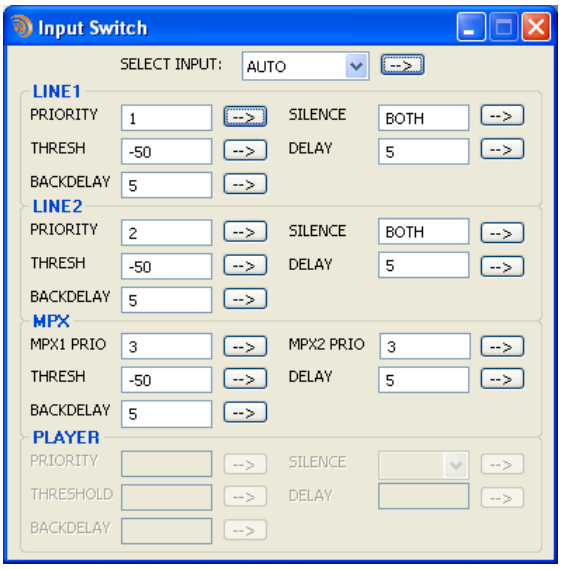


*These values are also available with the Select and Input Switch front panel menus or with the INPUT and CONF serial commands.*

**Internal Generator:**

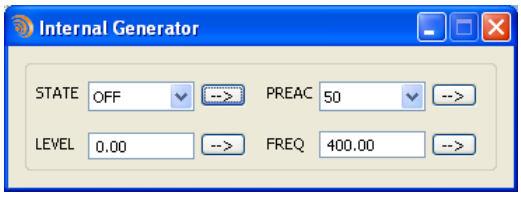


*These values are also available with the Audio Generator front panel menu or with the INPUT.AUDIOGEN serial commands.*


Crown Broadcast, a division of International Radio & Electronics Corporation 25166 Leer Drive, Elkhart, Indiana, 46514-5425 USA
Ph +1 (574) 262 8900

**AGC/Limiter:**

*These values are also available with the FM Limiter front panel menu or with the CONF serial commands.*

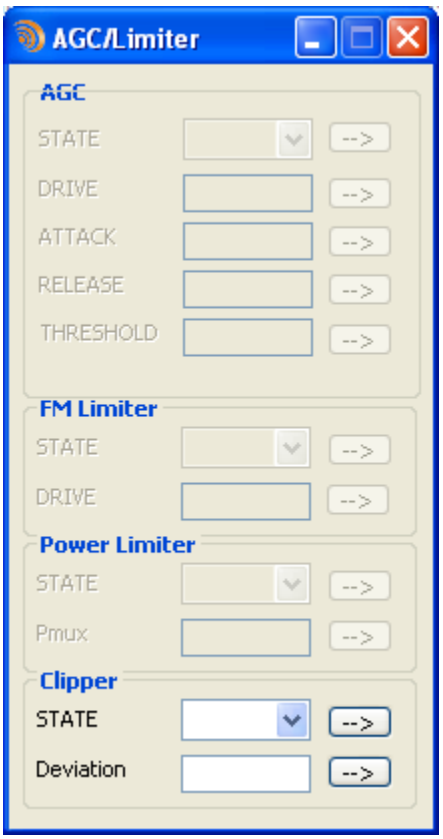



Crown Broadcast, a division of International Radio & Electronics Corporation 25166 Leer Drive, Elkhart, Indiana, 46514-5425 USA
Ph +1 (574) 262 8900

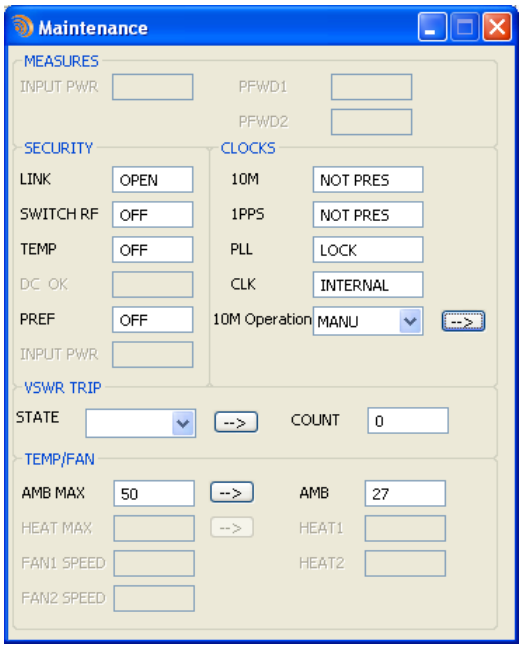


**Maintenance:**

*These values are also available with the TX Parameters and Temperature/Fan front panel menus or with the STATUS, TX, MEAS and CONF serial commands.*

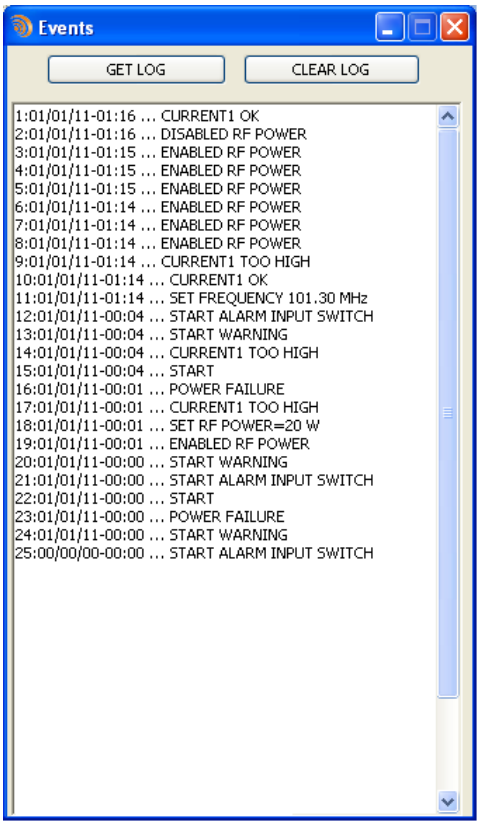


**Events:**

*Logs are also available with SYS.LOG serial commands.*


Crown Broadcast, a division of International Radio & Electronics Corporation 25166 Leer Drive, Elkhart, Indiana, 46514-5425 USA
Ph +1 (574) 262 8900

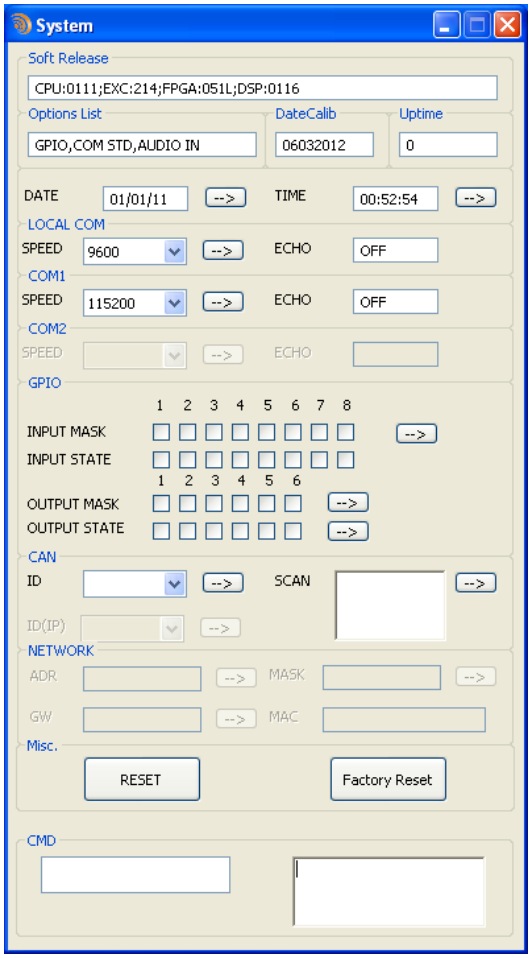


**System:**

*These values are also available with the COM Port, Time/Date and System front panel menus or with the SYS serial commands.*

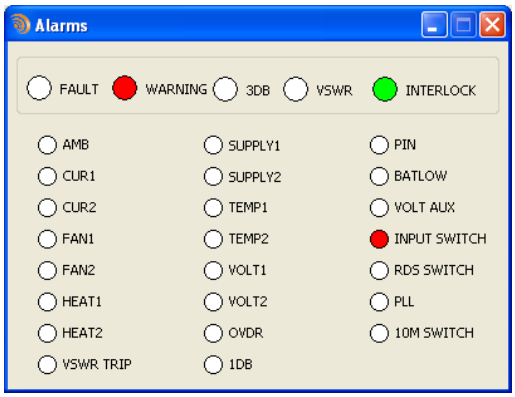


**Alarms:**

*These values are also available with the Alarms front panel menu or with the ALARM serial commands.*

### 7.2.3. Saving parameters

With the application, you may also save parameters before upgrading or as a backup.

- Select the Files / Save menu.
- Select the location and name for the backup file. Default name is *module_type_serial_number.conf.*

To load a previously saved configuration, use the Files / Load menu.

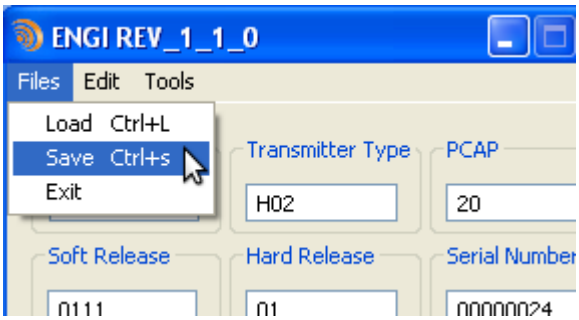



Crown Broadcast, a division of International Radio & Electronics Corporation 25166 Leer Drive, Elkhart, Indiana, 46514-5425 USA
Ph +1 (574) 262 8900

# 8. REMOTE CONTROL AND MONITORING WITH THE GPIO BOARD

## 8.1. Introduction

This function is available when the optional standard or analog GPIO board is installed on the transmitter.

It provides an interface between CROWN BROADCAST transmitters and external systems. The modules are remotely controlled via “RC” inputs using opto isolators. Working state and alarms are sent to “RM” outputs via relays, or “RM ANA” analog outputs on the analog board.

## 8.2. Standard GPIO board

### 8.2.1. Description of control and monitoring functions

Control commands work when an impulsion longer than 100 ms is sent to the corresponding input.

There are eight control functions:

- Standby off: Turns on the transmitter
- Standby on: Turns off the transmitter
- RF on: Enables the RF
- RF off: Disables the RF
- TA on: Enables the TA (basic RDS)
- TA off: Disables the TA (basic RDS)
- DSN main: Enables the main DSN (basic RDS)
- DSN alt: Enables the alternative DSN (basic RDS)

Outputs are relays that include a normally closed or normally open contact. When an event occurs in the unit, the corresponding relay is activated.

Six monitoring functions are associated with relays:

- Local: Indicates if the unit is in local mode
- Default: Indicates a transmitter default
- Warning: Indicates an alarm linked to the internal working of the transmitter (temperature, voltage…)
- RF: Indicates if the RF is enabled
- On: Indicates if the transmitter is not in standby mode
- Off: Indicates if the transmitter is in standby mode
- VSWR: Indicates if there is a VSWR error


Crown Broadcast, a division of International Radio & Electronics Corporation 25166 Leer Drive, Elkhart, Indiana, 46514-5425 USA
Ph +1 (574) 262 8900

### 8.2.2. Remote control function pinout

| Function | Remote Control | Input name | Common |
|---|---|---|---|
| STANDBY OFF | RC1 | OPT1A(20) | RC_COMMUN(24) |
| STANDBY ON | RC2 | OPT2A(8) | RC_COMMUN(24) |
| RF ON | RC3 | CONF1(21) | RC_COMMUN(24) |
| RF OFF | RC4 | CONF2(9) | RC_COMMUN(24) |
| TA ON | RC5 | CONF3(22) | RC_COMMUN(24) |
| TA OFF | RC6 | CONF4(10) | RC_COMMUN(24) |
| DSN MAIN | RC7 | CONF5(23) | RC_COMMUN(24) |
| DSN ALT | RC8 | CONF6(11) | RC_COMMUN(24) |

Numbers in parenthesis indicated the pin number on the DB25 connector.

### 8.2.3. Remote monitoring function pinout

| Event | Remote Monitoring | Output name | Common |
|---|---|---|---|
| LOCAL | RM1 | REL1_RT(1) | REL1_C(14) |
| FAULT | RM2 | REL2_RT(2) | REL2_C(15) |
| WARNING | RM3 | REL3_RT(3) | REL3_C(16) |
| RF (ON/OFF) | RM4 | REL4_RT(4) | REL4_C(17) |
| ON | RM5 | REL5_T(5) | REL5_C(6) |
| OFF | RM6 | REL5_R(5) | REL5_C(6) |
| VSWR | RM7 | REL6_RT(6) | REL6_C(7) |

Numbers in parenthesis indicated the pin number on the DB25 connector.

A closed link indicates valid information when configuration is as in the following table.

Default jumper position:

| Relay | Positions | Contacts |
|---|---|---|
| REL_1RT | JUMP2[1 ;2] | NO |
| REL2_RT | JUMP3[1 ;2] | NO |
| REL3_RT | JUMP5[1 ;2] | NO |
| REL4_RT | JUMP1[1 ;2] | NO |
| REL6_RT | JUMP4[1 ;2] | NO |

Jumpers from 1 to 5 (JUMP1 to JUMP5): select the NO or NC contact of the relays.

ⓘ *When switching to local mode (relay 1), all other relays are disabled.*


Crown Broadcast, a division of International Radio & Electronics Corporation 25166 Leer Drive, Elkhart, Indiana, 46514-5425 USA
Ph +1 (574) 262 8900

### 8.2.4. Physical representation of the GPIOs

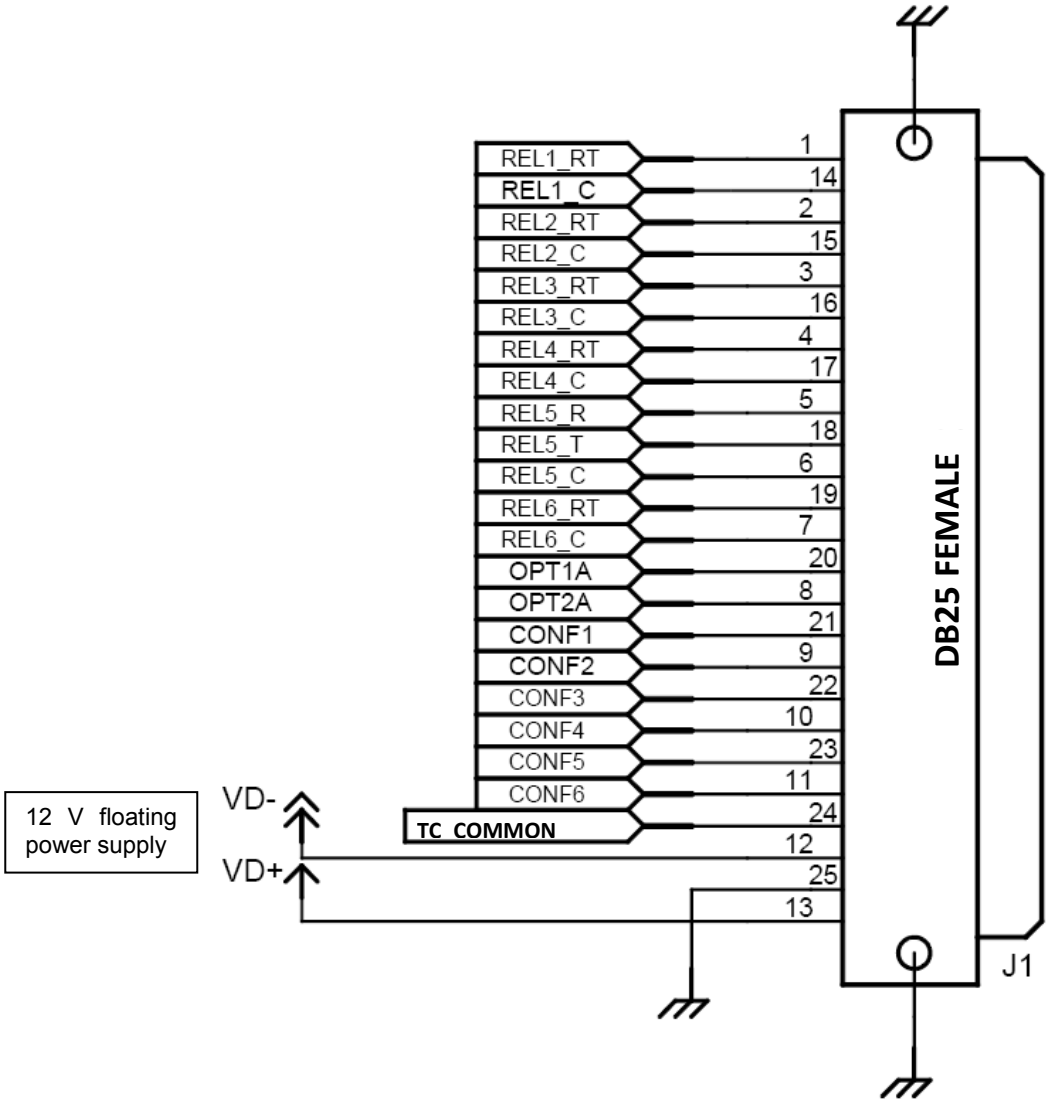



Crown Broadcast, a division of International Radio & Electronics Corporation 25166 Leer Drive, Elkhart, Indiana, 46514-5425 USA
Ph +1 (574) 262 8900

### 8.2.5. Management using serial commands

A set of commands makes it possible to override the control board to modify specific RC outputs and read specific RM inputs.

To do so, set the RC you want to control (SYS.GPIO.IN.MASK) and the RM you want information from (SYS.GPIO.OUT.MASK).

When these commands are used, the control board cannot monitor nor control them.

| NAME | Access (R/W) | Serial port possible value | Comments |
|---|---|---|---|
| SYS.GPIO.IN.ACT | R | XX X=[A..F;0..9] | Indicates the corresponding RC when managed manually (see SYS.GPIO.IN.MASK). |
| SYS.GPIO.OUT.ACT | R/W | XX X=[A..F;0..9] | Enables the corresponding RM when managed manually (see SYS.GPIO.OUT.MASK). |
| SYS.GPIO.IN.MASK | R/W | XX X=[A..F;0..9] | Sets the RC control either by the control board or manually. Hexadecimal code. Each bit corresponds to an input. Ex: A1 (10100001) indicates the RC 1, 6 and 8 are managed manually. |
| SYS.GPIO.OUT.MASK | R/W | XX X=[A..F;0..9] | Sets the RM control either by the control board or manually. Hexadecimal code. Each bit corresponds to an input: Ex: 21 (00100001) indicates RM 1 and 6 are managed manually. |

**Serial commands used to configure RC/RM**

Remote control binary values:

| Remote Control | Binary value |
|---|---|
| RC1 | xxxxxxx1 |
| RC2 | xxxxxx1x |
| RC3 | xxxxx1xx |
| RC4 | xxxx1xxx |
| RC5 | xxx1xxxx |
| RC6 | xx1xxxxx |
| RC7 | x1xxxxxx |
| RC8 | 1xxxxxxx |

Remote monitoring binary values:

| Remote Monitoring | Binary value |
|---|---|
| RM1 | xxxxxxx1 |
| RM2 | xxxxxx1x |
| RM3 | xxxxx1xx |
| RM4 | xxxx1xxx |
| RM5 | xxx1xxxx |
| RM6 | xx1xxxxx |
| RM7 | x1xxxxxx |


Crown Broadcast, a division of International Radio & Electronics Corporation 25166 Leer Drive, Elkhart, Indiana, 46514-5425 USA
Ph +1 (574) 262 8900

However, the format of values returned by serial commands is hexadecimal.

You must then convert each 4 digit set as per the following table:

| Hexadecimal | Binary |
|---|---|
| 0 | 0000 |
| 1 | 0001 |
| 2 | 0010 |
| 3 | 0011 |
| 4 | 0100 |
| 5 | 0101 |
| 6 | 0110 |
| 7 | 0111 |
| 8 | 1000 |
| 9 | 1001 |
| A | 1010 |
| B | 1011 |
| C | 1100 |
| D | 1101 |
| E | 1110 |
| F | 1111 |

Examples:

If the command

SYS.GPIO.IN.ACT

returns

8A

You must convert the hexadecimal value in binary, ie 8A=10001010, which indicates that RC 2, 4 and 8 are activated.

To control RM 3 and 5, convert the binary value 00010100: you get 14 as per the above table. You must then send the command:

SYS.GPIO.OUT.MASK=14



Crown Broadcast, a division of International Radio & Electronics Corporation 25166 Leer Drive, Elkhart, Indiana, 46514-5425 USA
Ph +1 (574) 262 8900

### 8.2.6. Management using serial commands

To configure one of the analog functions, simply associate the desired function to one of the configurable outputs:

| NAME | Access (R/W) | Serial port possible value | Comments |
|---|---|---|---|
| SYS.GPIO.CONF1 | R/W | "AMB" or "FAN1" or "VOLT" or "HEAT" or "FAN2" or "CURRENT" or "PWR" | Sets the remote monitoring ANA3 on the optional GPIO Analog board |
| SYS.GPIO.CONF2 | R/W | "AMB" or "FAN1" or "VOLT" or "HEAT" or "FAN2" or "CURRENT" or "PWR" | Sets the remote monitoring ANA4 on the optional GPIO Analog board |


Crown Broadcast, a division of International Radio & Electronics Corporation 25166 Leer Drive, Elkhart, Indiana, 46514-5425 USA
Ph +1 (574) 262 8900

# 9. THE EMBEDDED WEBSITE

## 9.1. Introduction

This function is available with the IP/IO version when the optional TCP/IP board is installed on the transmitter.

## 9.2. Connecting to the embedded web site

For remote access, connect to the transmitter's embedded web site. Simply open a web browser (Google Chrome, Mozilla Firefox …) and enter the transmitter's IP address in the address bar (set on the front panel).

ⓘ *Though the web application is compatible with most browsers, performances vary greatly from one browser to another. For this reason, we recommend you use Google Chrome, Mozilla Firefox or install the Chrome Frame plug-in for Microsoft Internet Explorer*

Select the language if necessary.

Enter the user name and password:

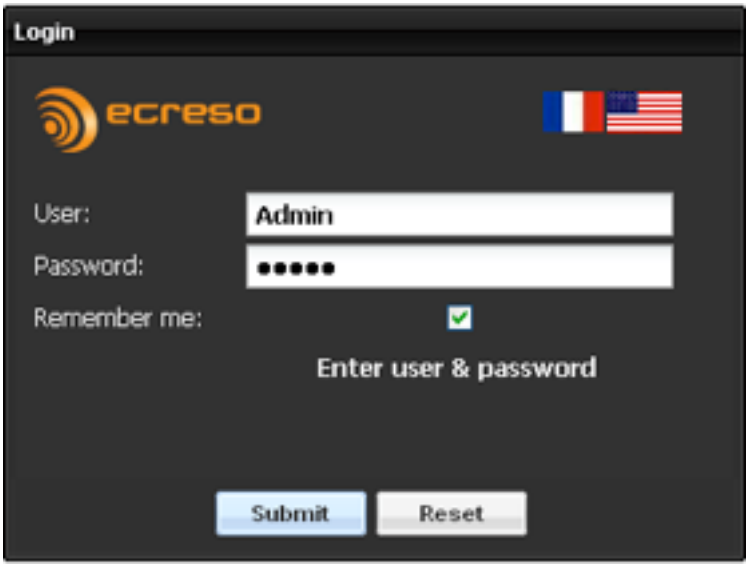


Two user levels are available:

- Administrator (Admin / admin by default). The administrator has full rights.
- Guest (Guest / guest by default). The guest has read-only access to all pages except the user management page.

Check the box to save connection information. This process is managed by the web browser cookies; login and passwords are saved for 15 days.


Crown Broadcast, a division of International Radio & Electronics Corporation 25166 Leer Drive, Elkhart, Indiana, 46514-5425 USA
Ph +1 (574) 262 8900

The tool bar on top of the page enables access to all pages of the site. The user can view the status, access receiver configuration, RDS data and system configuration.

Data can be both viewed and modified.

A series of indicators on the bottom of the screen enables all connected users to know the transmitter current status:

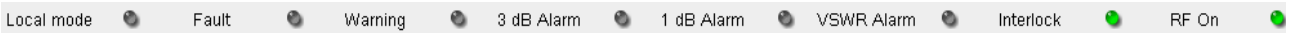


| | | |
|---|---|---|
| Local mode | | Transmitter in standard mode |
| | | Transmitter in local mode |
| Fault | | No fault |
| | | Current fault alarm |
| Warning | | No warning |
| | | Current warning alarm |
| 3 dB Alarm | | No alarm |
| | | Current 3 dB alarm |
| 1 dB Alarm | | No alarm |
| | | Current 1 dB alarm |
| VSWR Alarme | | No alarm |
| | | Current VSWR alarm |
| Interlock | | Interlock not present |
| | | Interlock present |
| RF On | | RF off |
| | | RF on |


Crown Broadcast, a division of International Radio & Electronics Corporation 25166 Leer Drive, Elkhart, Indiana, 46514-5425 USA
Ph +1 (574) 262 8900

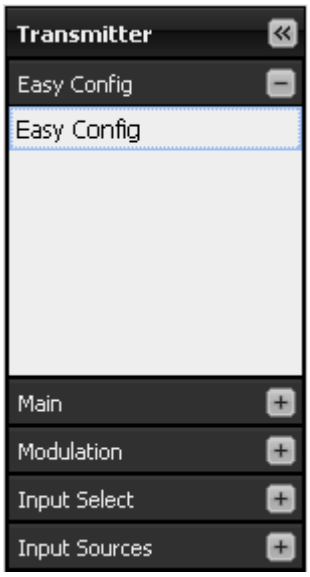


The menu on the left allows navigating to the various pages of each section.

Clicking on the double-arrow button « hides the menu. Clicking on the button » displays it again.

A section may include one or more pages; display of hide links to reach them by clicking the buttons + or −.

The tool bar, the indicators and the menu will be available on all pages of the site.


Crown Broadcast, a division of International Radio & Electronics Corporation 25166 Leer Drive, Elkhart, Indiana, 46514-5425 USA
Ph +1 (574) 262 8900

## 9.3. Viewing the Status

### 9.3.1. Advanced measurements

**Overview**

Four graphs are available on this page:

- RF spectrum
- MPX output
- Current input spectrum
- Audio level

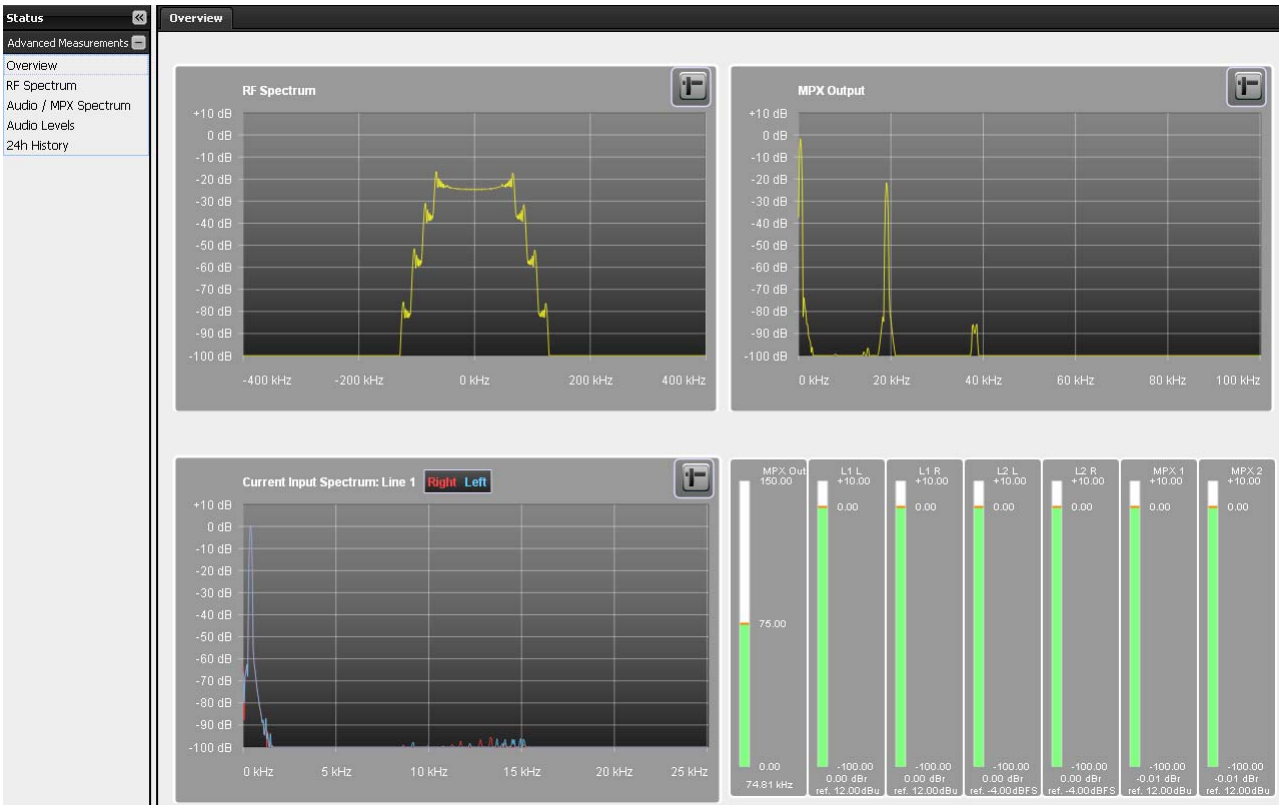


On each curve, the button displays the abscissa and ordinate of a specific point. Click and drag the abscissa's label to view other points on the curve.

Crown Broadcast, a division of International Radio & Electronics Corporation 25166 Leer Drive, Elkhart, Indiana, 46514-5425 USA
Ph +1 (574) 262 8900

The **RF Spectrum** page displays the same curve as on the overview page but on a larger scale.

The Audio/MPX Spectrum page displays either of the selected curve:

- Line 1
- Line 2
- MPX outputs
- MPX inputs

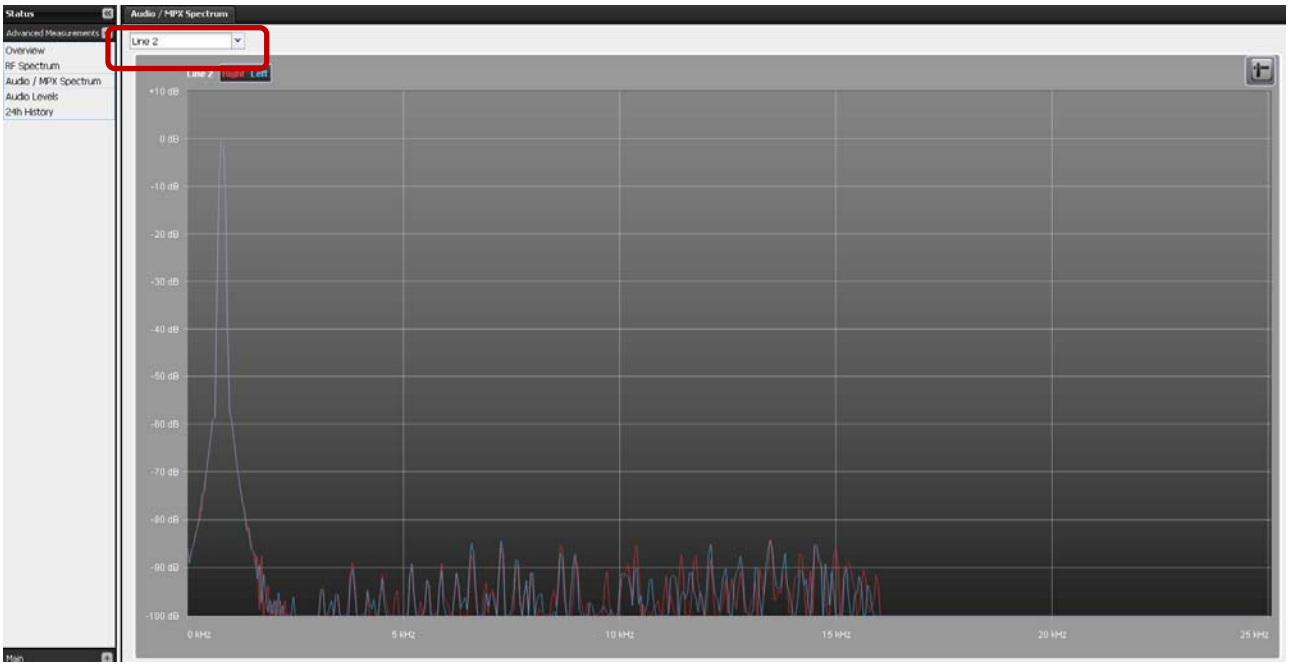


The **Audio levels** page displays the same curve as on the overview page but on a larger scale.


Crown Broadcast, a division of International Radio & Electronics Corporation 25166 Leer Drive, Elkhart, Indiana, 46514-5425 USA
Ph +1 (574) 262 8900

Red lines indicate the reference level. On the MPX outputs graph, the reference level is the total deviation, which can be set in the transmitter configuration pages. If the total deviation is changed, the audio levels page has to be refreshed to display the new value.

### 24 hour history

This page displays measurements over the last day or the last hour:

- Direct power
- Forward power
- VSWR
- Voltage
- Current
- Global efficiency
- Mosfet efficiency
- Ambient temperature
- Preamplifier power*
- Radiator temperature*
- Fan speed*

** Available measurements vary depending on the power of the transmitter*


Crown Broadcast, a division of International Radio & Electronics Corporation 25166 Leer Drive, Elkhart, Indiana, 46514-5425 USA
Ph +1 (574) 262 8900

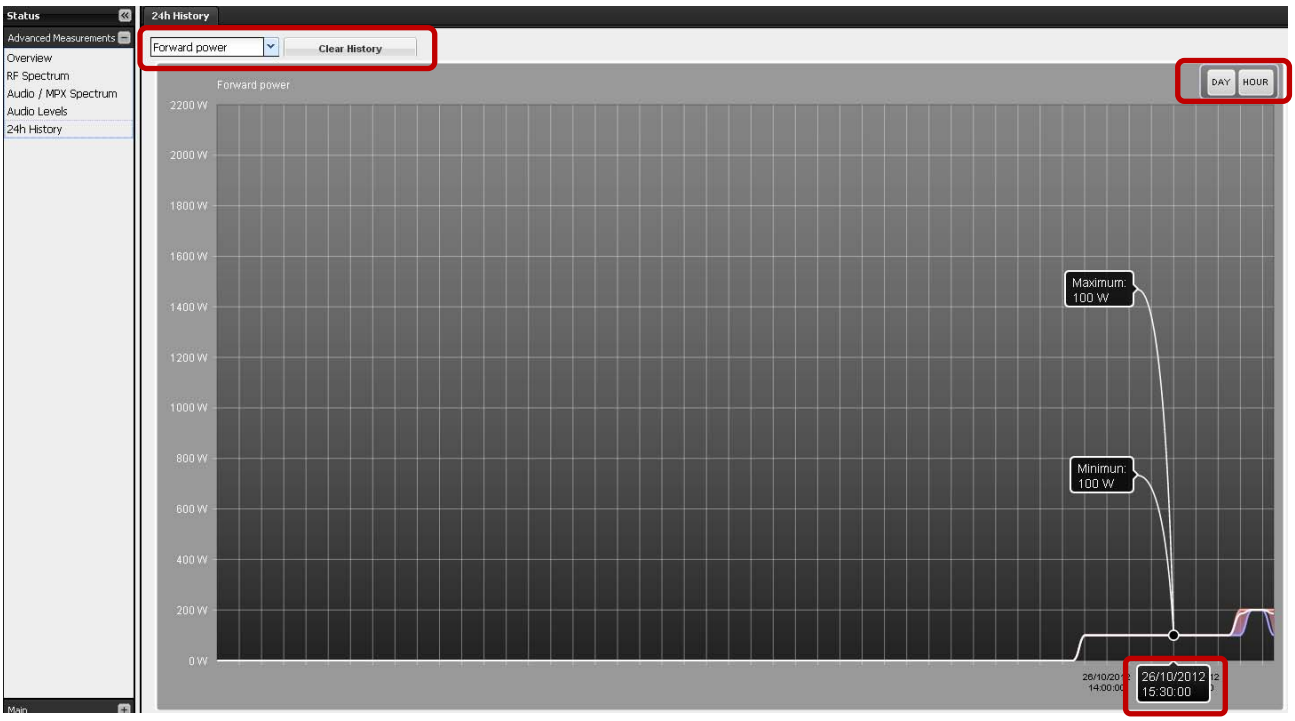


To display a specific day or time, slide the abscissa's label.

A button allows clearing the history.



Crown Broadcast, a division of International Radio & Electronics Corporation 25166 Leer Drive, Elkhart, Indiana, 46514-5425 USA
Ph +1 (574) 262 8900

### 9.3.2. Main status

This page displays the main parameters of the transmitter (read-only).

The "Switched to Backup" indicator shows:

- Main input is on
- Switch to backup input


Crown Broadcast, a division of International Radio & Electronics Corporation 25166 Leer Drive, Elkhart, Indiana, 46514-5425 USA
Ph +1 (574) 262 8900

## 9.4. Transmitter configuration

Click the button

to access transmitter configuration pages.

This section displays the parameters of the transmitter so they can be updated.

When values have been changed, click the button

to save the new settings.

ⓘ *If the transmitter is in local mode (orange indicator at the bottom of the page), you will not be able to modify settings.*

### 9.4.1. Easy configuration

All basic parameters are available on this page. They are available on the front panel in the Easy mode. Please refer to parameter descriptions sections 5.4.1 to 5.4.8 for more details.

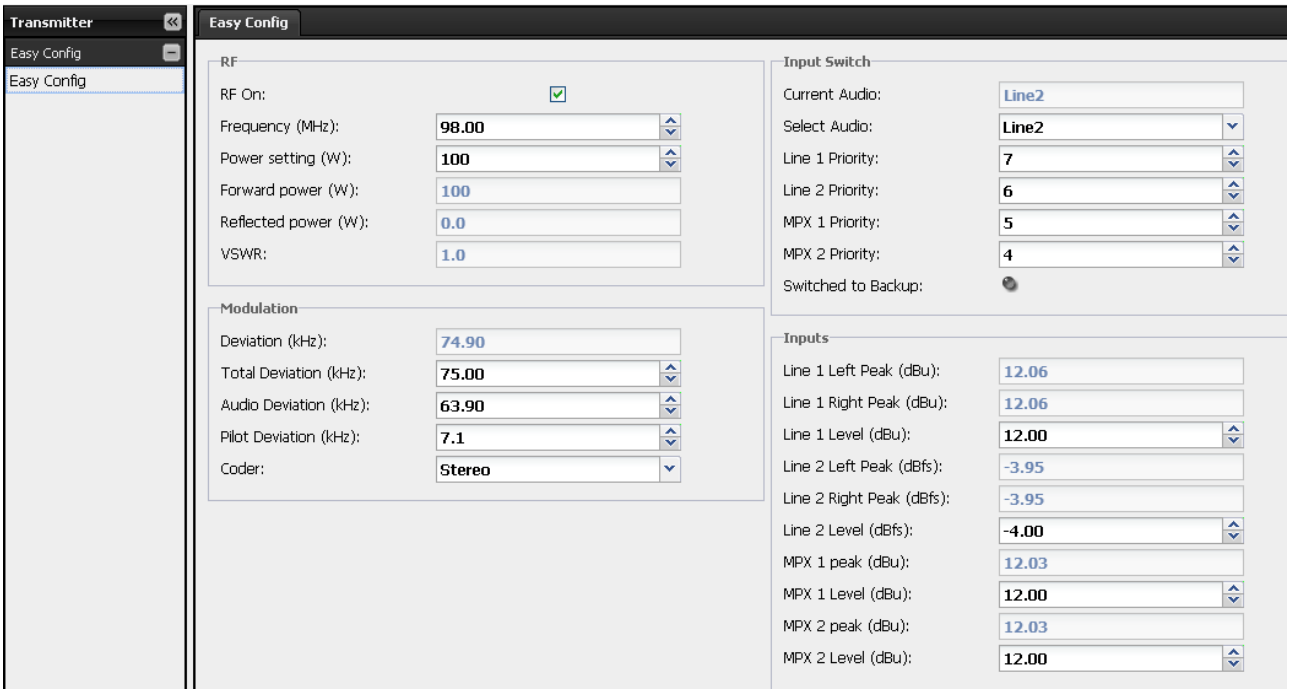


The "Switched to Backup" indicator shows:

- Main input is on
- Switch to backup input

For a complete configuration, use the Main, Modulation, Input Select and Input Sources pages.


Crown Broadcast, a division of International Radio & Electronics Corporation 25166 Leer Drive, Elkhart, Indiana, 46514-5425 USA
Ph +1 (574) 262 8900

### 9.4.2. Main configuration

***Parameters***

Set RF parameters on this page. Please refer to parameter descriptions section 5.4.1 for more details.

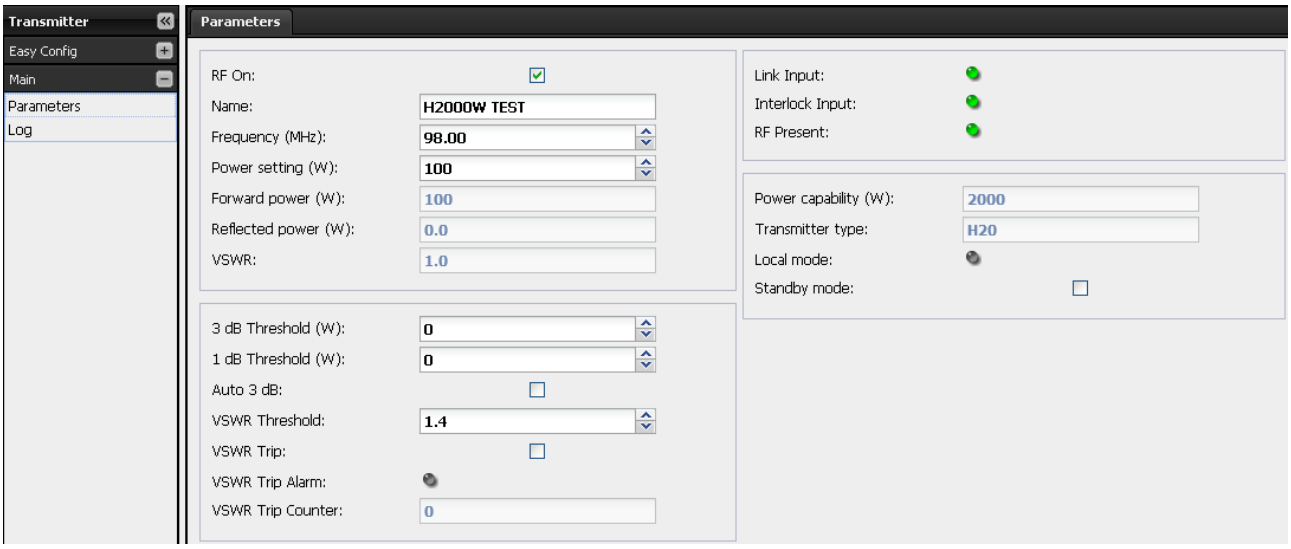


Indicators show:

| | | |
|---|---|---|
| Trip VSWR alarm | | No alarm |
| | | Current VSWR trip alarm |
| Link input | | Link disabled |
| | | Active link |
| Interlock input | | Interlock not present |
| | | Interlock present |
| RF presence | | RF disabled |
| | | RF enabled |
| Local mode | | Transmitter in standard mode |
| | | Transmitter in local mode |


Crown Broadcast, a division of International Radio & Electronics Corporation 25166 Leer Drive, Elkhart, Indiana, 46514-5425 USA
Ph +1 (574) 262 8900

### *Log*

View the event log on this page.

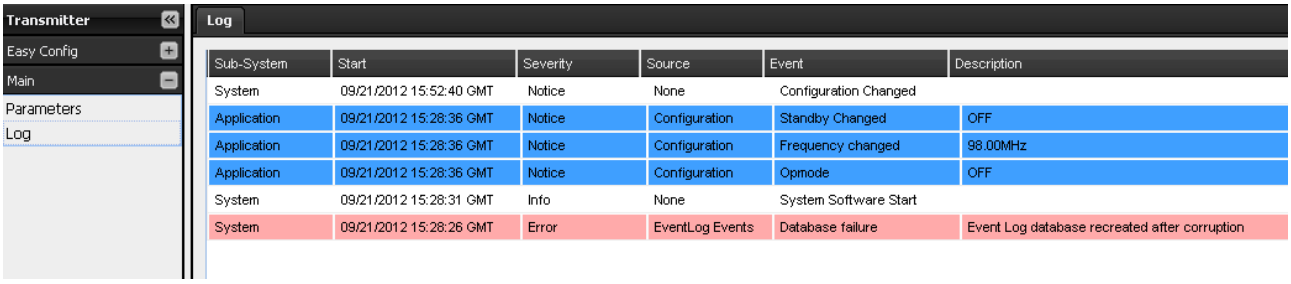


Click on a column title to display a menu that will allow you to sort the column and to display or hide other columns.

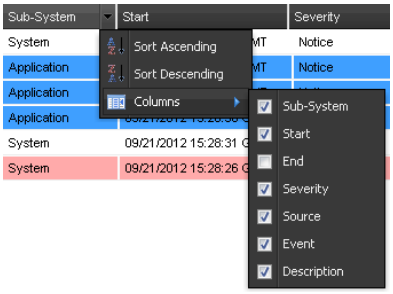


The event color gives its degree of severity:

- Red: Errors
- Yellow: Warning
- Blue or grey: Notice (when the source is respectively Configuration or System)
- White: Notice or information, when the source is neither configuration nor system)

### 9.4.3. Modulation configuration

### *Deviation*

Set the deviation on this page. Please refer to parameter descriptions section 5.4.8 for more details.

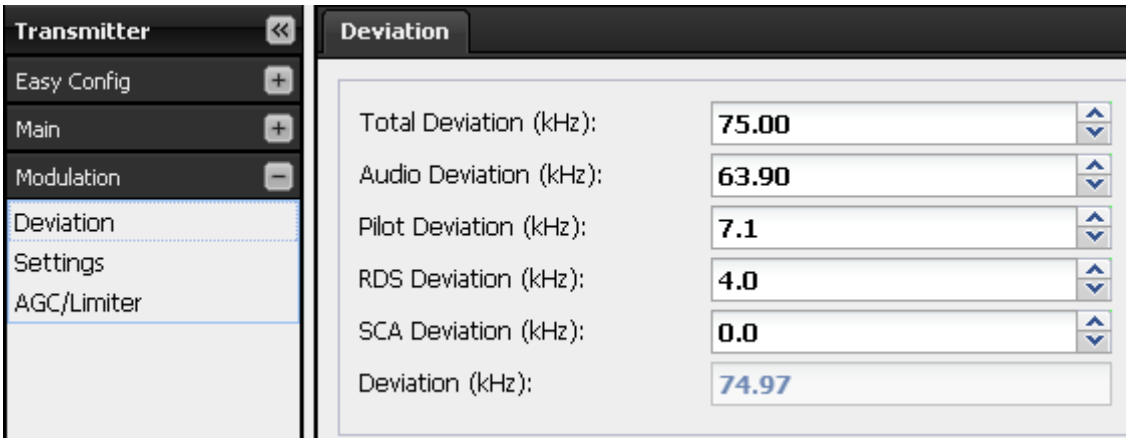



Crown Broadcast, a division of International Radio & Electronics Corporation 25166 Leer Drive, Elkhart, Indiana, 46514-5425 USA
Ph +1 (574) 262 8900

### *Settings*

Set the RDS and SCA sub-carriers on this page. Please refer to parameter descriptions section 5.4.10 for more details.

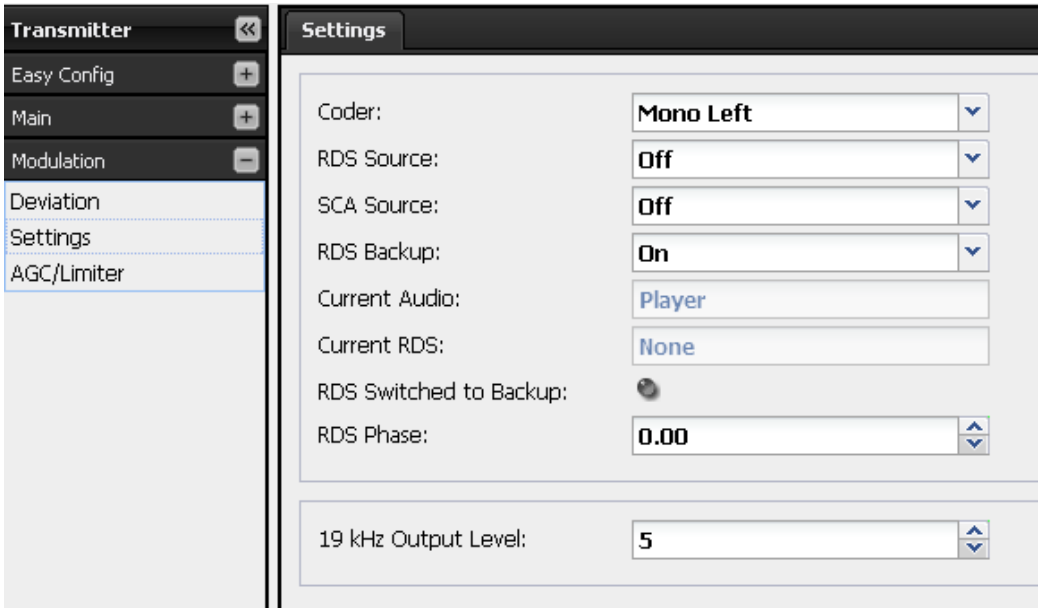


The "RDS Switched to Backup" indicator shows:

- Main RDS input is on
- RDS switched to backup input

### *AGC/Limiter*

Set the limiter on this page. Please refer to parameter descriptions section 5.4.11 for more details.

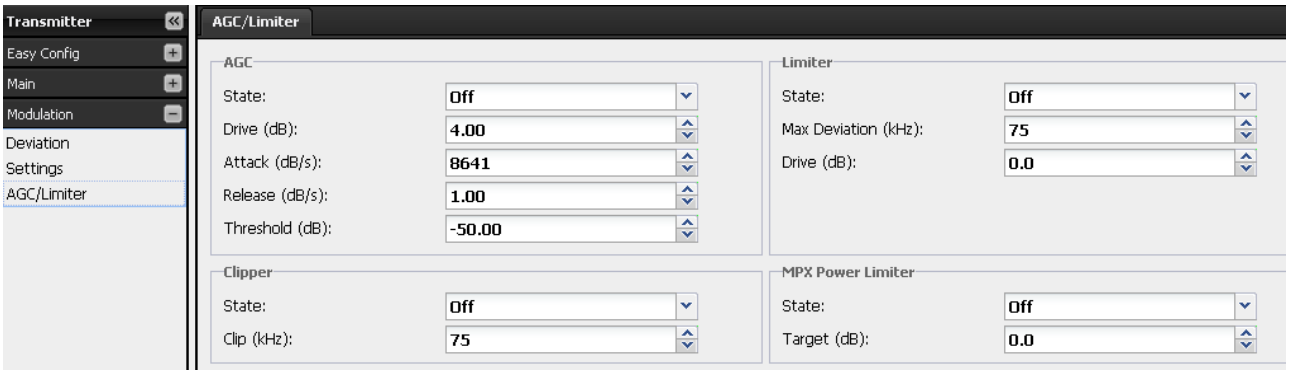



Crown Broadcast, a division of International Radio & Electronics Corporation 25166 Leer Drive, Elkhart, Indiana, 46514-5425 USA
Ph +1 (574) 262 8900

### 9.4.4. Input Selection

***Priority***

Set the priority of the various inputs on this page. Please refer to parameter descriptions section 5.4.2 for more details.

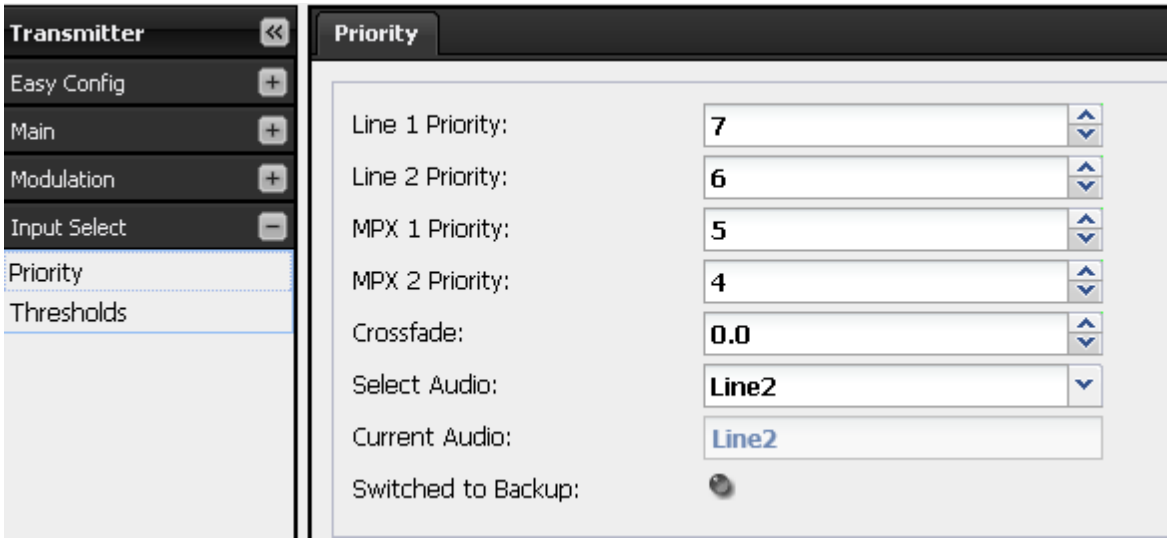


The "Switched to Backup" indicator shows:

- Main input is on
- Switch to backup input

***Thresholds***

Set input thresholds on this page. Please refer to parameter descriptions section 5.4.2 for more details.

Crown Broadcast, a division of International Radio & Electronics Corporation 25166 Leer Drive, Elkhart, Indiana, 46514-5425 USA
Ph +1 (574) 262 8900

### 9.4.5. Input Sources

***Line 1 / Line 2***

Set the analog input (Line 1) or the AES input (Line 2) on these pages. Please refer to parameter descriptions sections 5.4.3 and 5.4.4 for more details.

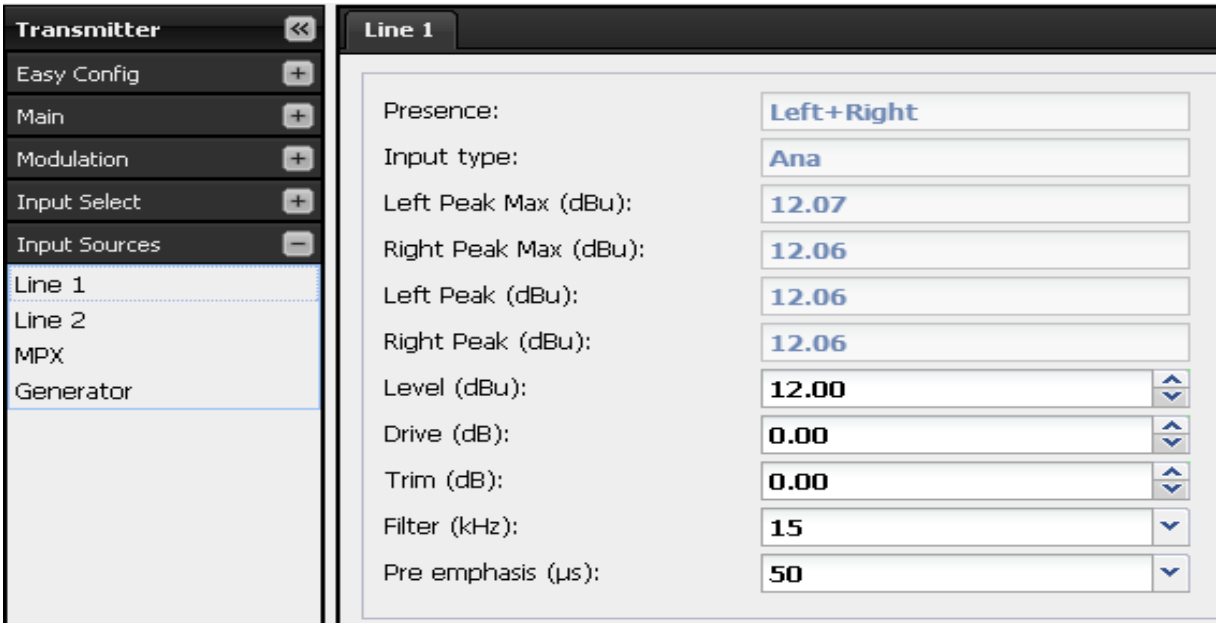


***MPX***

Set the MPX 1 and MPX 2 inputs on this page. Please refer to parameter descriptions section 5.4.5 for more details.

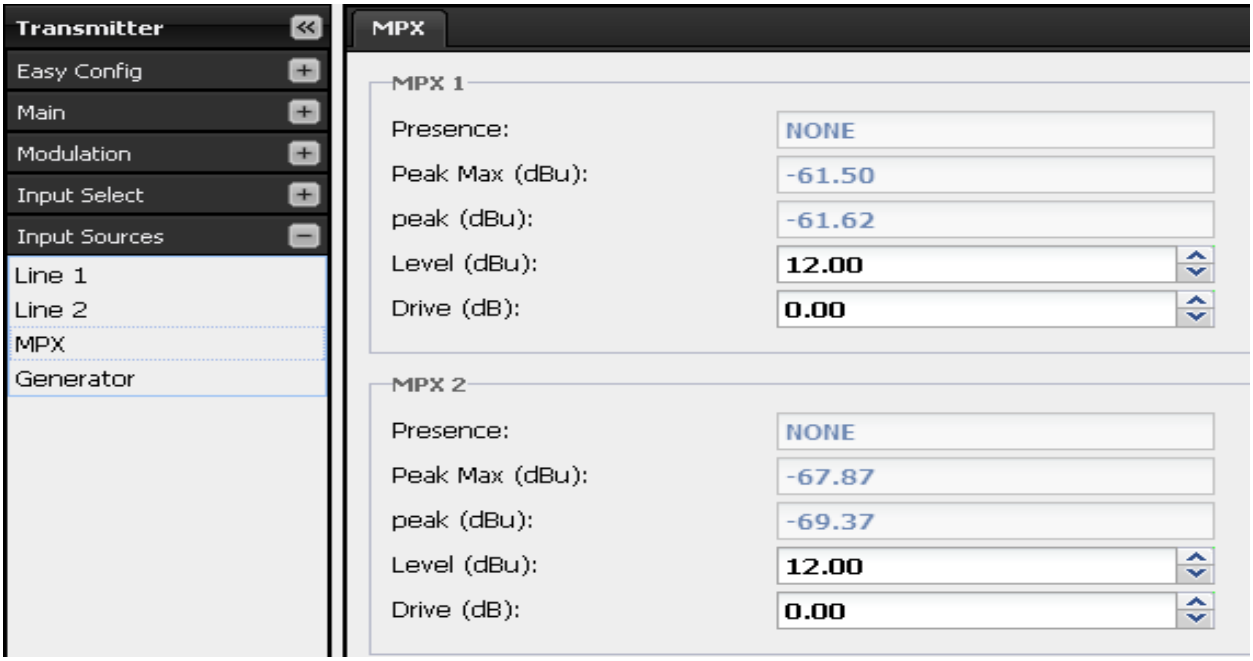



Crown Broadcast, a division of International Radio & Electronics Corporation 25166 Leer Drive, Elkhart, Indiana, 46514-5425 USA
Ph +1 (574) 262 8900

### *Generator*

Set the internal generator on this page. Please refer to parameter descriptions section 5.4.7 for more details.

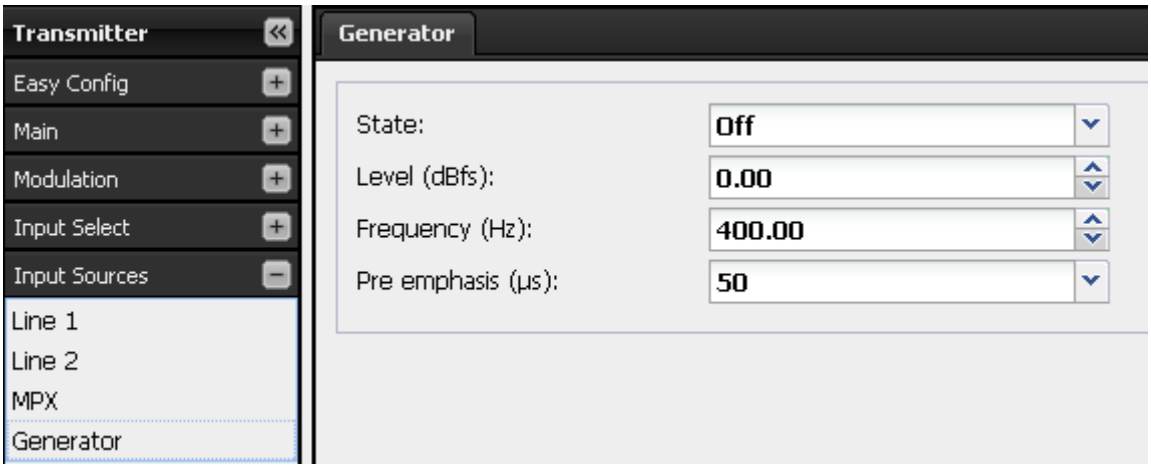



Crown Broadcast, a division of International Radio & Electronics Corporation 25166 Leer Drive, Elkhart, Indiana, 46514-5425 USA
Ph +1 (574) 262 8900

## 9.5. Setting the RDS data

Click the button

to access RDS data pages.

This section displays RDS parameters so they can be updated.

When values have been changed, click the button

to save the new settings.

ⓘ *If the transmitter is in local mode (orange indicator at the bottom of the page), you will not be able to modify settings.*

### 9.5.1. Basic encoder

ⓘ *This page is available when the Basic RDS option is enabled.*

Please refer to parameter descriptions section 5.4.12 for more details.

***Parameters***

Enter the ID of the main and the alternate DSN.

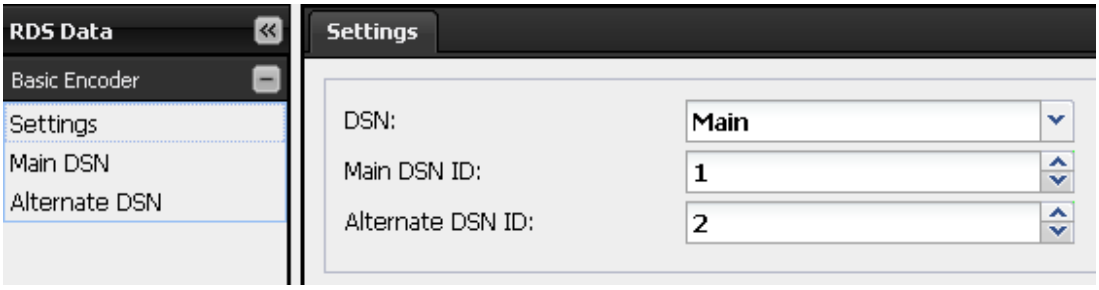



Crown Broadcast, a division of International Radio & Electronics Corporation 25166 Leer Drive, Elkhart, Indiana, 46514-5425 USA
Ph +1 (574) 262 8900

### *Main DSN / Alternate DSN*

Set DSN parameters on these pages.

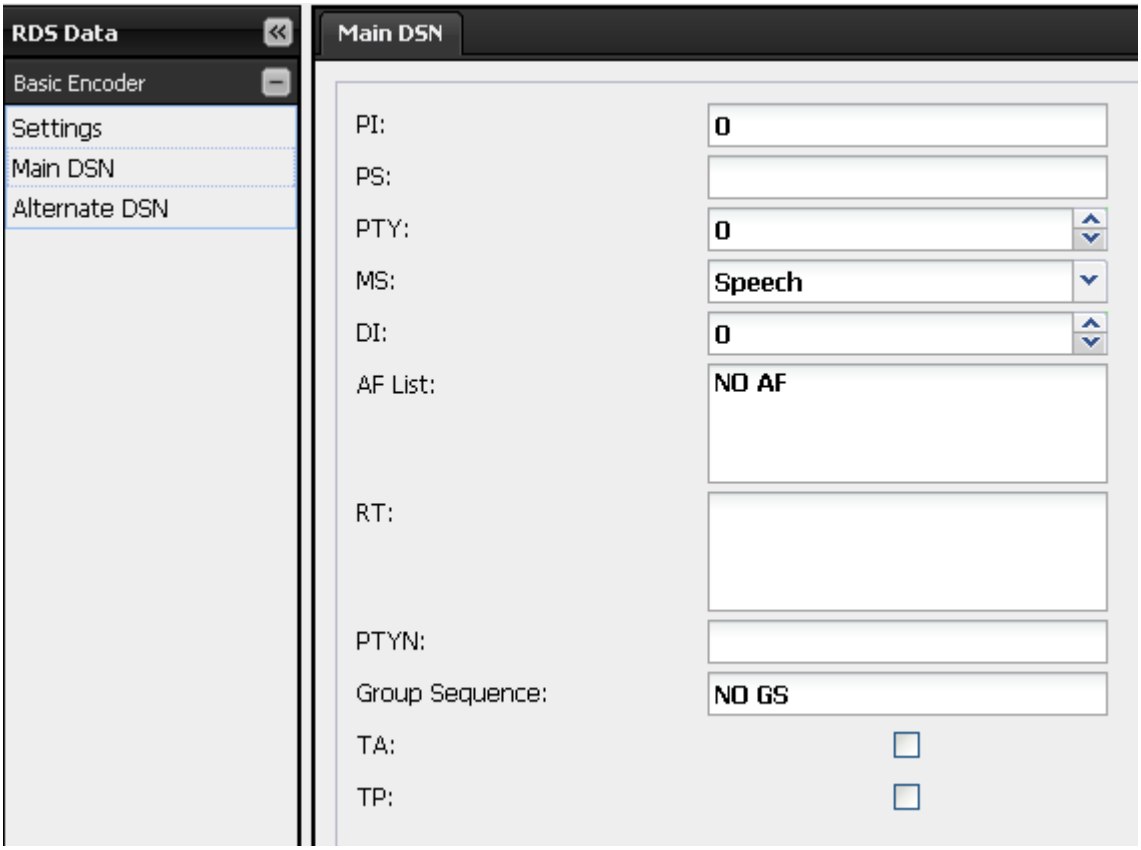



Crown Broadcast, a division of International Radio & Electronics Corporation 25166 Leer Drive, Elkhart, Indiana, 46514-5425 USA
Ph +1 (574) 262 8900

### 9.5.2. Advanced Encoder

The advanced encoder can be set using serial commands (see section 6.2.7) or the web interface but not with the front panel.

***PS Scroll***

Set the PS scroll on this page.

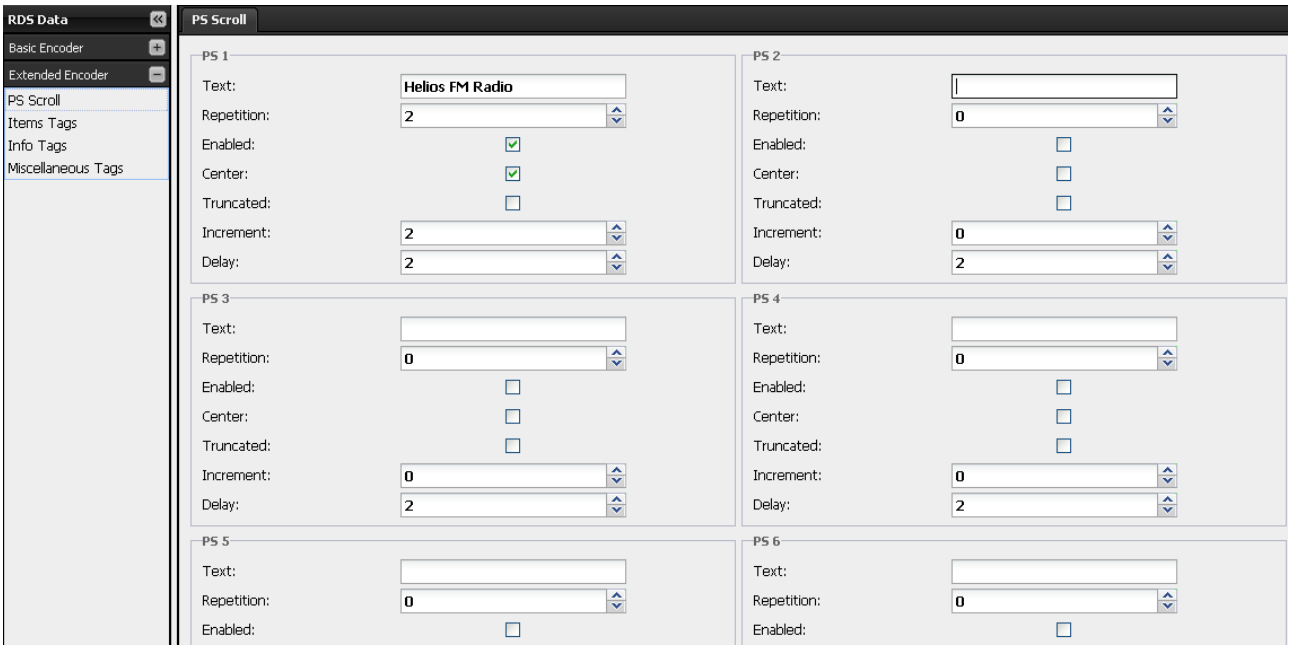


For each line of PS text, set:

- **Text:** Text may include dynamic data (<ITEM….>, <INFO…>…) that will only be sent if filled in, and for ITEM type fields if the validity time frame is correct.
- **Repetition:** The encoder will repeat the line before sending the next one (max: 99 times).
- **Enabled:** Check the box for the line to be sent.
- **Center:** When scrolling is done word by word, the encoder may center each word in the receiver screen. Only applicable when 'Word' is the chosen increment
- **Truncated:** Set the number of scrolling characters. Scrolling may be done by word. In that case, the encoder will detect whole words (identifiable delimiters are: ' ', '-', ','), and fit as many whole words as possible on each screen.
- **Increment:** When scrolling is done word by word, the encoder truncates words longer than the display screen (longer than 8 characters). Only applicable when 'Word' is the chosen increment.
- **Delay:** Time laps between 2 consecutive screens.


Crown Broadcast, a division of International Radio & Electronics Corporation 25166 Leer Drive, Elkhart, Indiana, 46514-5425 USA
Ph +1 (574) 262 8900

### *TAG pages*

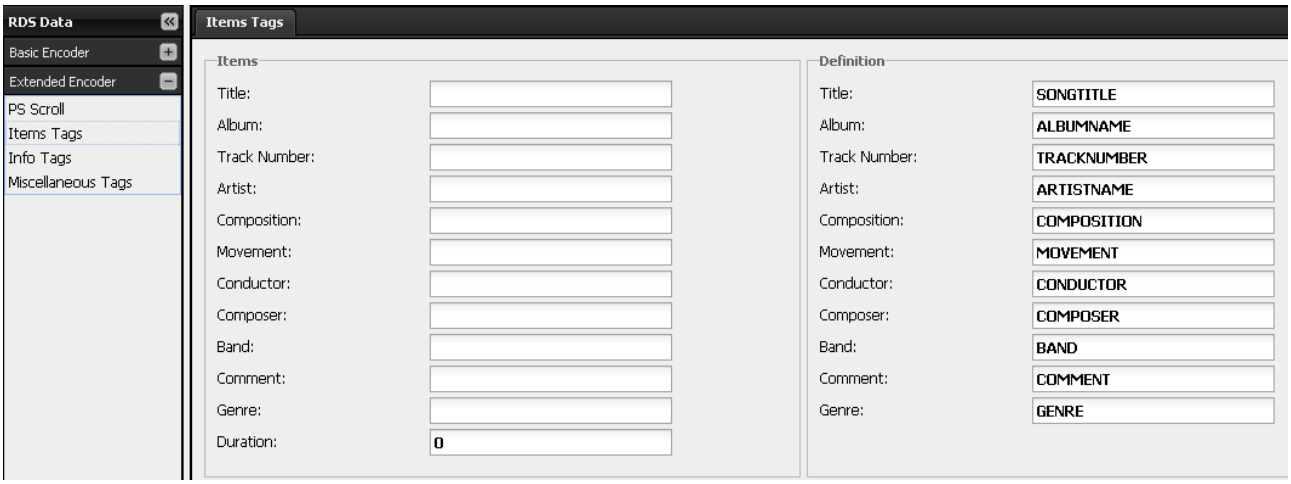


Dynamic fields presented on the ‘Items Tags’, ‘Info Tags’ and ‘Miscellaneous Tags’ pages display current data in the left column and automation command definitions in the right column. Definitions should be configured to match commands of the automation software application.

ⓘ *Each name must be unique.*

ⓘ *Automation commands are case sensitive.*



Crown Broadcast, a division of International Radio & Electronics Corporation 25166 Leer Drive, Elkhart, Indiana, 46514-5425 USA
Ph +1 (574) 262 8900

## Table of definition of commands

| Category | RTplus classes | MP3 id3v2 | | Description |
|---|---|---|---|---|
| **Item** | ITEM.TITLE | TIT2 | TITLE | Title of item |
| | ITEM.ALBUM | TALB | ALBUM | The collection name to which this track belongs |
| | ITEM.TRACKNUMBER | TRCK | TRACKNUM | Number of the current part of the current level |
| | ITEM.ARTIST | TPE1 | ARTIST | A person or band/collective generally considered responsible for the work |
| | ITEM.COMPOSITION | | | A complete composition (mainly used in classical music) |
| | ITEM.MOVEMENT | | | A **movement** is a large division of a larger composition or musical form |
| | ITEM.CONDUCTOR | TPE3 | CONDUCTOR | The artist(s) who performed the work. In classical music this would be the conductor, soloists |
| | ITEM.COMPOSER | TCOM | COMPOSER | Name of the original composer |
| | ITEM.BAND | TPE2 | BAND | Band / orchestra / accompaniment / musician |
| | ITEM.COMMENT | COMM | COMMENT | Any comment related to the content |
| | ITEM.GENRE | TCON | CONTENTTYPE | The main genre of the audio or video; e.g. "classical", "ambient-house", "synthpop", "sci-fi", "drama", etc. |
| **Info** | INFO.NEWS | | | Headline |
| | INFO.NEWS.LOCAL | | | Local news. |
| | INFO.STOCKMARKET | | | Quote information |
| | INFO.SPORT | | | Result of a game, either as one tag "Indiana University : Purdue University 101:78" or as 2 distinct tags |
| | INFO.LOTTERY | | | Lottery |
| | INFO.HOROSCOPE | | | Horoscope |
| | INFO.DAILYDIVERSION | | | Daily tip / diversion / joke ... |
| | INFO.HEALTH | | | Information about health: Allergy alarms ... |
| | INFO.EVENT | | | Info about an event |
| | INFO.SZENE | | | Information about scene (Hot locations to be, ...) |
| | INFO.CINEMA | | | Information about movies in cinema |
| | INFO.TV | | | Information about TV-movies |
| | INFO.DATE_TIME | | | Information about date and time (Client to chose between date and time) |
| | INFO.WEATHER | | | Information about weather |
| | INFO.ALARM | | | An alarm information, typically an official alarm send out while the alarm flag is set |
| | INFO.ADVERTISEMENT | | | Info about an advertisement. May be in parallel to an audio advertisements |
| | INFO.OTHER | | | Other Information: Not especially specified |
| **Program** | STATIONNAME.LONG | | | Name describing the radio station |
| | PROGRAM.NOW | | | EPG info program now |
| | PROGRAM.NEXT | | | EPG info program next |
| | PROGRAM.PART | | | Part of the current radio show: E.g. one of several parts of the PROGRAM.NOW |
| | PROGRAM.HOST | | | Name of the host of the radio show |
| | PROGRAM.EDITORIAL _STAFF | | | |


Crown Broadcast, a division of International Radio & Electronics Corporation 25166 Leer Drive, Elkhart, Indiana, 46514-5425 USA
Ph +1 (574) 262 8900

| Category | RTplus classes | MP3 id3v2 | | Description |
|---|---|---|---|---|
| | PROGRAM.RADIO | | | Information about radio shows: A link towards another frequency with other content (NOT AF list) May be one tag (keyword##frequency) or two distinctive tags |
| | PROGRAM.HOMEPAGE | WORS | WWWRADIOPAGE | Link to radio station homepage |
| **Interactivity** | PHONE.HOTLINE | | | The telephone number of the radio stations hotline |
| | PHONE.STUDIO | | | The telephone number of the radio stations studio |
| | PHONE.OTHER | | | Name and telephone number: Either as one tag ("keyword##phone number") or as two distinct tags |
| | SMS.STUDIO | | | The sms number of the radio stations studio (to send directly a sms into the studio) |
| | SMS.OTHER | | | Name and sms number: Either as one tag ("keyword##sms number") or as two distinct tags |
| | EMAIL.HOTLINE | | | The email address of the radio stations hotline |
| | EMAIL.STUDIO | | | The email address of the radio stations studio |
| | EMAIL.OTHER | | | Name and email address: Either as one tag ("keyword##phone number") or as two distinct tags |
| | MMS.OTHER | | | Name and mms number: Either as one tag ("keyword##mms number") or as two distinct tags |
| | CHAT | | | chat content: send by users to a specific address and broadcasted by the Radio Station |
| | CHAT.CENTER | | | Address, where contributions to the chat shall be sent (may be url or sms) |
| | VOTE.QUESTION | | | A question (typically binary) which can be answered by "yes" or "no" or "1" or "2" |
| | VOTE.CENTER | | | url or sms number to send your answer to |
| **Descriptor** | PLACE | | | Descriptor will always be the second RT tag in a message. And will describe the RT tag 1 in more detail |
| | APPOINTMENT | | | Adds info about date and time |
| | HOTLINE | | | Hotline number to call to get more info |
| | IDENTIFIER | TSRC | ISRC | Can identify any tag in RT1. For music it is the: International Standard Recording Code (http://www.ifpi.org/isrc/) |
| | PURCHASE | WPAY | WWWPAYMENT | Address where item can be purchased. Address can be an url or a sms-number |
| | GET_DATA | | | Retrieves either via a sms or url-link more data about tag in RT1. (Info request via Point to Point - unicast) |


Crown Broadcast, a division of International Radio & Electronics Corporation 25166 Leer Drive, Elkhart, Indiana, 46514-5425 USA
Ph +1 (574) 262 8900

## 9.6. System configuration

Click the button

to access system pages.

When values have been changed, click the button

to save the new settings.

ⓘ *If the transmitter is in local mode (orange indicator at the bottom of the page), you will not be able to modify settings.*

### 9.6.1. Product ID

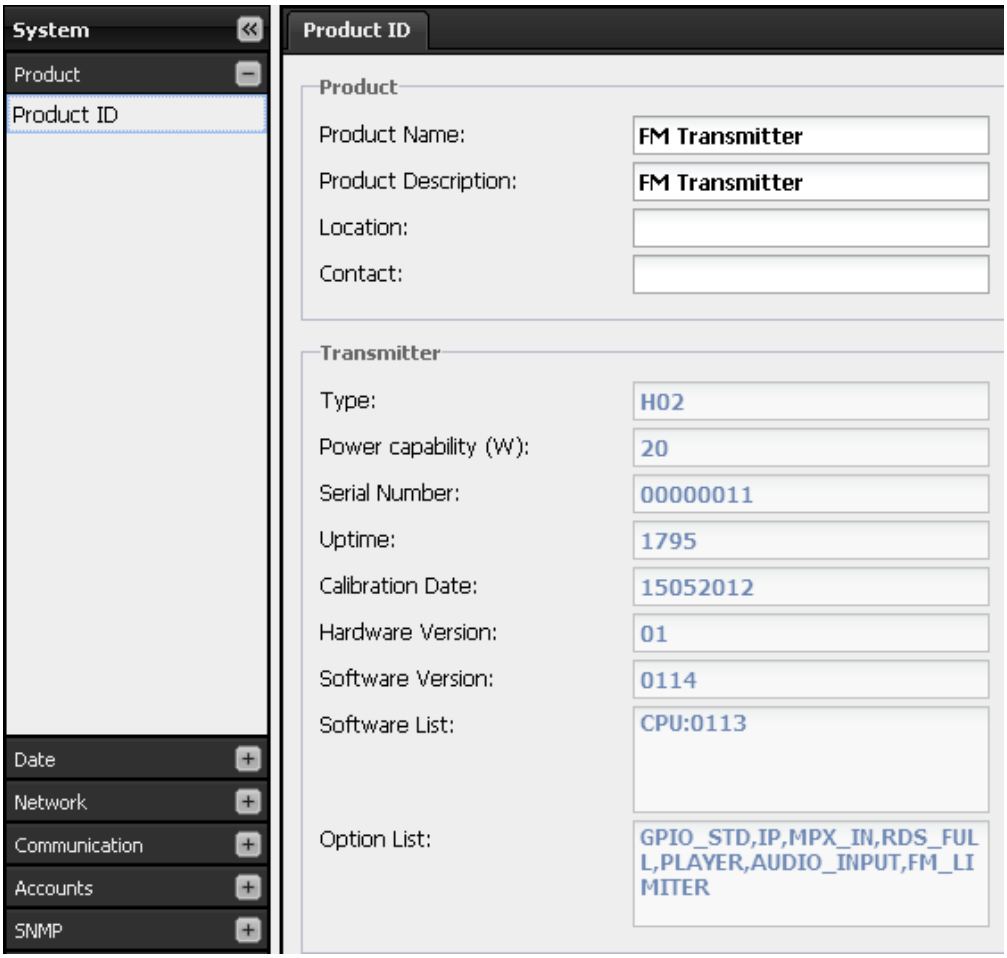


General information regarding the product: name, serial number, versions…

Use the product name and product description to adequately and uniquely describe your unit. They are useful in a network environment to identify it.

Specifically, these values are sent with SNMP traps.


Crown Broadcast, a division of International Radio & Electronics Corporation 25166 Leer Drive, Elkhart, Indiana, 46514-5425 USA
Ph +1 (574) 262 8900

### 9.6.2. Date / Time

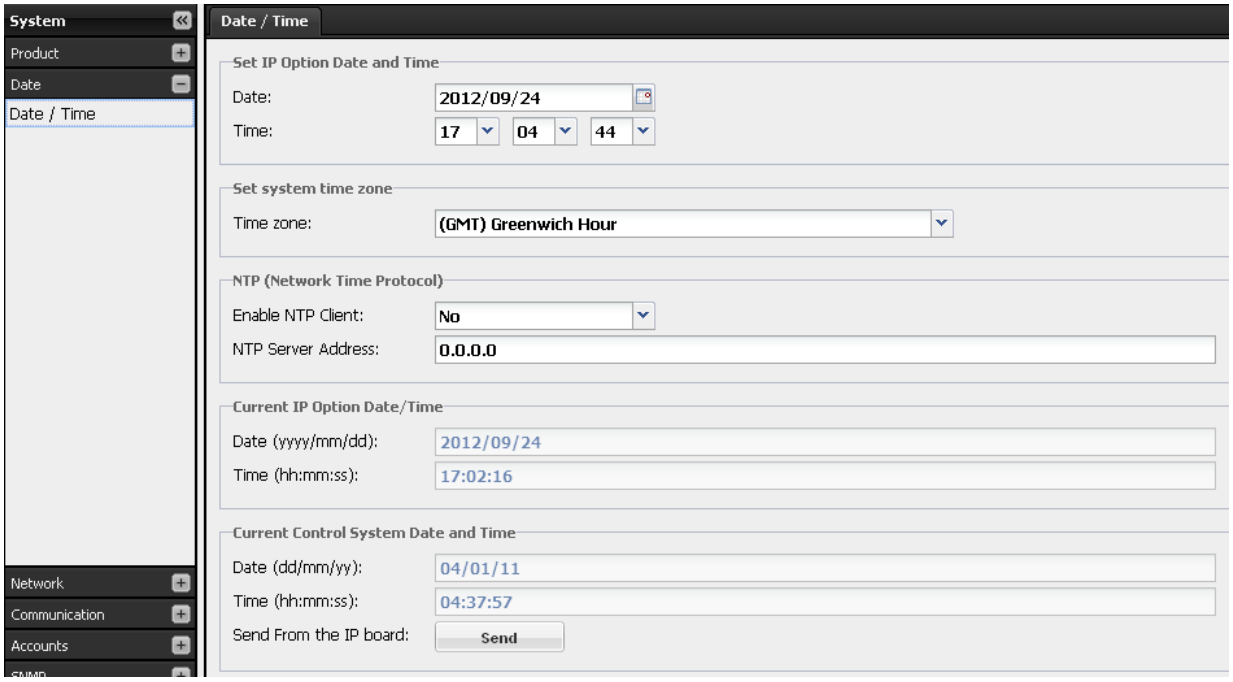


- **Set system date:**

  The user may update both date (year/month/day) and time (hour/minute/second).

- **Set system time zone:**

  The user selects the geographical zone from the list. Important to have this set correctly when using an NTP server.

ⓘ *Set the time zone first! Changes in the time zone affect the time that is displayed in the system time window, so setting the zone first will eliminate the need to set the system time twice!*


Crown Broadcast, a division of International Radio & Electronics Corporation 25166 Leer Drive, Elkhart, Indiana, 46514-5425 USA
Ph +1 (574) 262 8900

### 9.6.3. Network

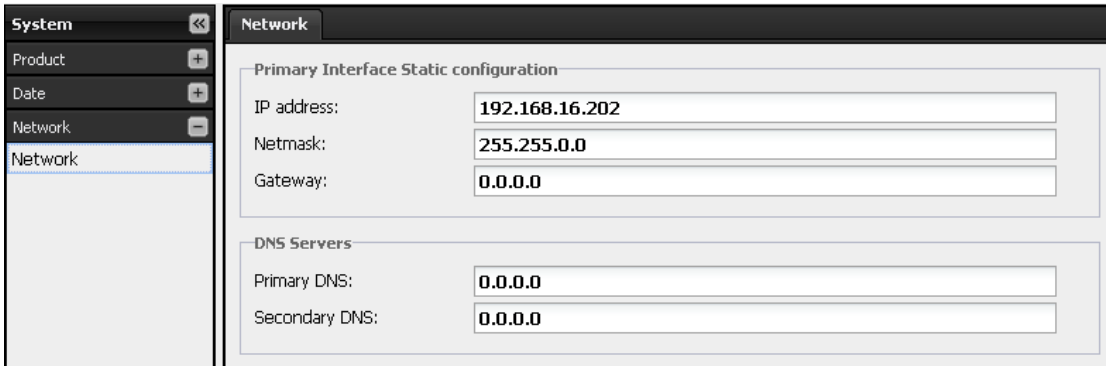


**IP Configuration:**

- **Static Ethernet configuration**

  Set the parameters for the network interface.

- **DNS Servers:** DNS configuration. Mandatory if before using DNS addresses on other configuration pages.

### 9.6.4. Communication

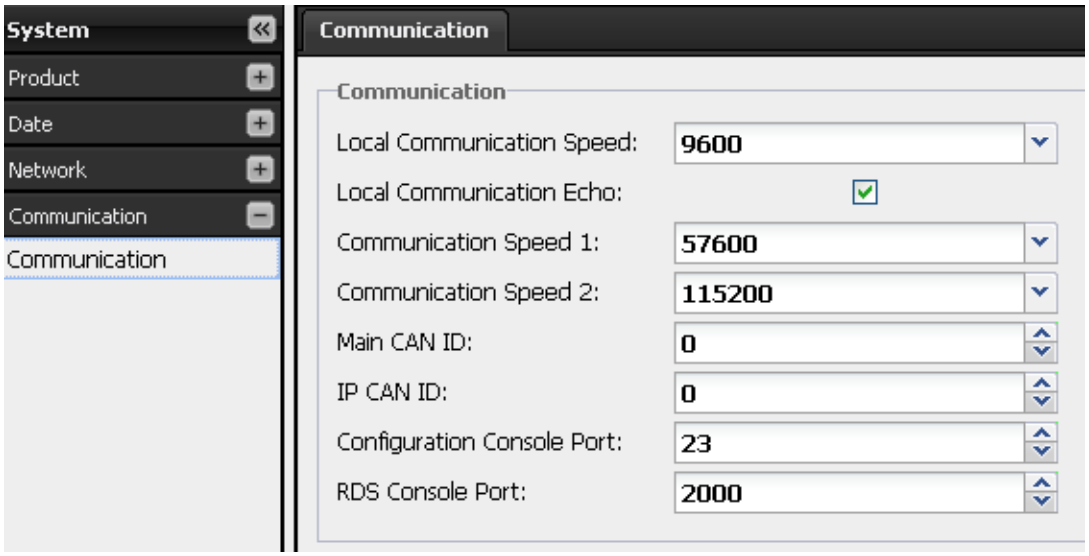


Parameters of the communication board.


Crown Broadcast, a division of International Radio & Electronics Corporation 25166 Leer Drive, Elkhart, Indiana, 46514-5425 USA
Ph +1 (574) 262 8900

### 9.6.5. Users

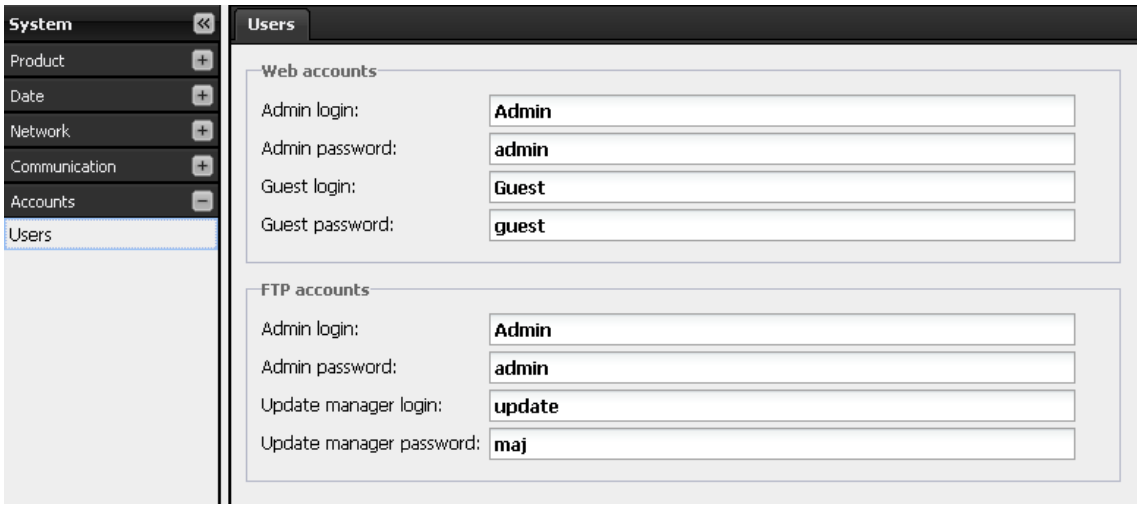


This is where web site connection settings can be modified. This page is only visible to administrators.

Two web and software accounts are available:

- Administrator (Admin / admin by default). The administrator has full rights.
- Guest (Guest / guest by default). The guest has read-only access to all pages except the user management page. The guest can download logs.

Two FTP accounts are available:

- Administrator (Admin / admin by default). The administrator has full rights.
- Update manager (update / maj by default). This account is only used for software updates.

ⓘ *You may change login names but make sure each is unique!*

ⓘ *Only use alphanumerical characters for user names and passwords.*


Crown Broadcast, a division of International Radio & Electronics Corporation 25166 Leer Drive, Elkhart, Indiana, 46514-5425 USA
Ph +1 (574) 262 8900

### 9.6.6. SNMP Agent

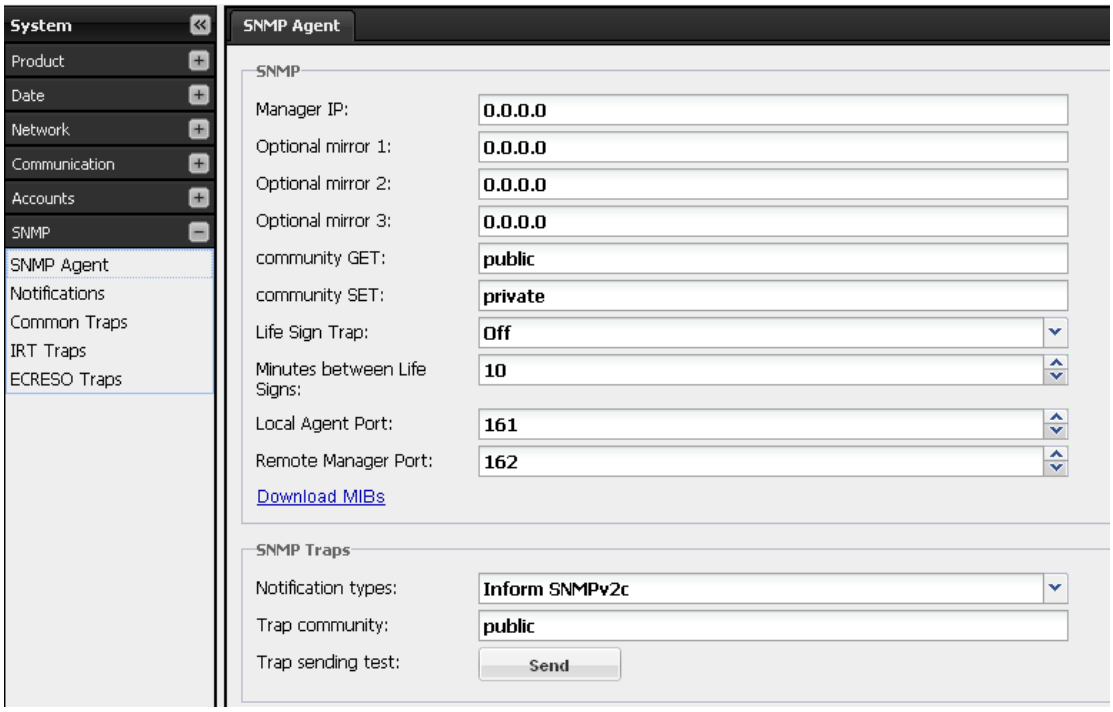


- **SNMP configuration**

The equipment enables multiple addresses to be configured for SNMP notifications. However, only the Main Manager has the authority to acknowledge notifications. With “INFORMS” messages, automatic answers from secondary managers are ignored by the unit.

- **MIB:** To download the MIB right click on the link and select “Save link as”
- **SNMP Traps configuration**

- SNMP Notification Type / Trap Community / System Description: trap settings
- Life Sign Trap / Minutes between Life Signs: Sends life signs every X minutes. This trap makes it possible to check that the unit is connected to the network.

- **Trap sending test:** enables the user to carry out a test according to the trap settings.

#### *9.6.6.1 Supported SNMP versions*

The unit implements an SNMP agent conforming to SNMPv1 and SNMPv2c versions. GET and SET commands are supported, as well as GETBULK in SNMPv2c. Notifications can be transmitted in TRAP V1 or V2c form or with an INFORM V2c type.

#### *9.6.6.2 Notification mode*

To make sure traps are received by the main recipient, the unit offers 2 methods. With both methods, traps are sent until they are acknowledged.


Crown Broadcast, a division of International Radio & Electronics Corporation 25166 Leer Drive, Elkhart, Indiana, 46514-5425 USA
Ph +1 (574) 262 8900

- **Automatic acknowledgement** for sending with INFORM. These notifications are only available with the version 2c of the protocol. This protocol checks that the manager sends the notification to the transmitter. This process is simple and reliable, no specific configuration is required for the manager.
- **Manual acknowledgement** for Traps V1 and Traps V2c. A specific OID ("alarmPendingAlarmsalarmAck") is extracted and its variables are sent with the trap. The manager must then execute a SET command. This method is more complex but is the only one that can work with the version 1 of the protocol.

The acknowledgment mode (Trap V1, Trap V2c or Inform) is identical for all alarms. See the next section **"Notifications"** for additional settings.

*With "SNMPv2c traps" notifications, it not possible to acknowledge traps.*
*In the same way, traps which do not require acknowledgment cannot be sent with the "Inform SNMPv2c" format, even when this format is selected. This is the case with the 'test' trap as well as with equipment information traps such as the 'Equipment On' trap.*

### 9.6.7. Notifications

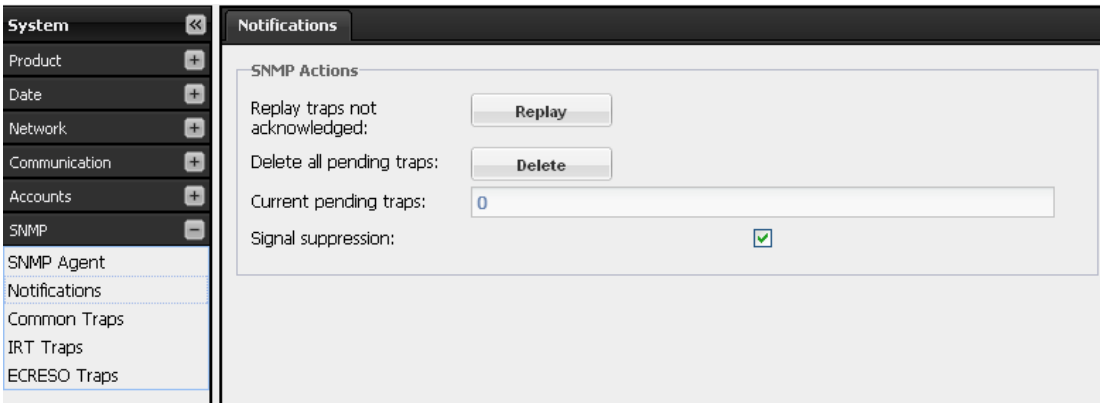


- **SNMP Actions**

The user may replay traps that have not been acknowledged yet.

The user may also delete pending traps that have not been acknowledged yet.


Crown Broadcast, a division of International Radio & Electronics Corporation 25166 Leer Drive, Elkhart, Indiana, 46514-5425 USA
Ph +1 (574) 262 8900

### 9.6.8. Common traps

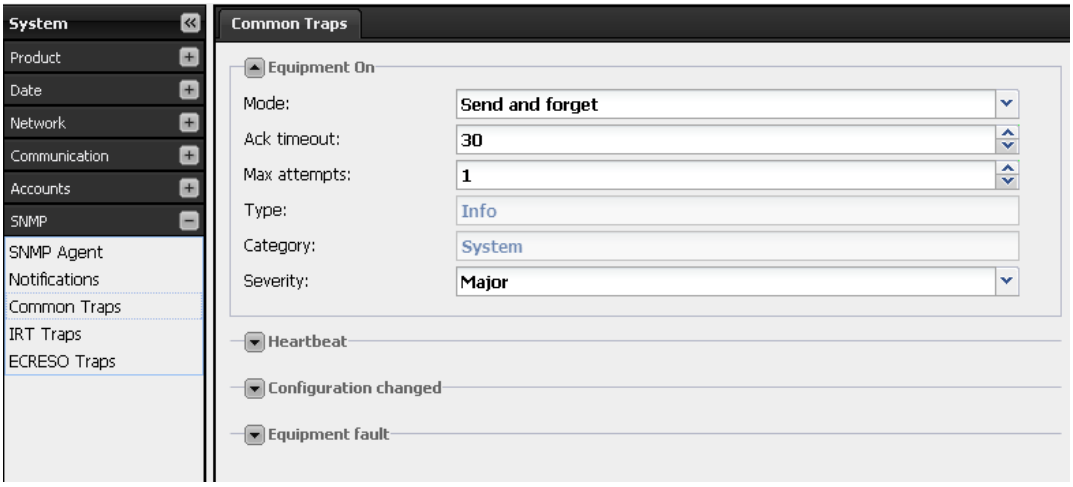


Click the arrow next to the trap name to display its parameters.

Set the mode:

- Resend until acknowledgement: the trap is regularly sent until acknowledgement.
- Send and forget: the trap is sent once, no follow-up is expected.
- Do not send.

If “Resend until acknowledgement” is selected, set the time to wait for acknowledgement before resending the trap (Ack timeout, in seconds) and the maximum number of times the trap will be resent (Max retries).

Set also the severity (log, minor, critical…).

### 9.6.9. IRT Traps

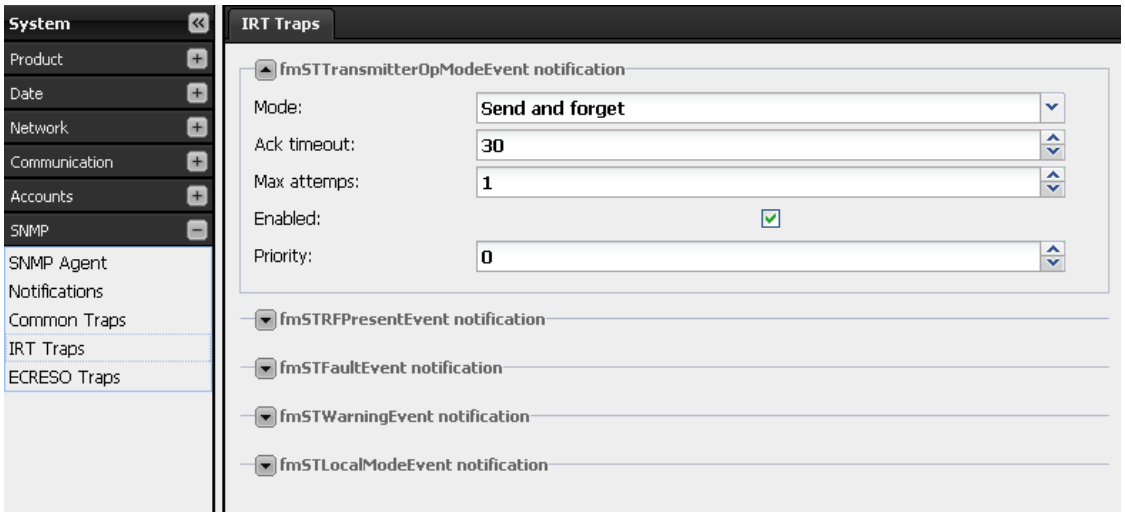



Crown Broadcast, a division of International Radio & Electronics Corporation 25166 Leer Drive, Elkhart, Indiana, 46514-5425 USA
Ph +1 (574) 262 8900

IRT traps are configured like common traps (see previous section), with 2 additional parameters:

- To enable the trap, check "Enabled" (replaces the “Do not send option” of the Common traps).
- Set the priority; this information which is sent with the traps can be used by an SNMP Manager as filter criteria for instance.

### 9.6.10. Crown Broadcast Traps

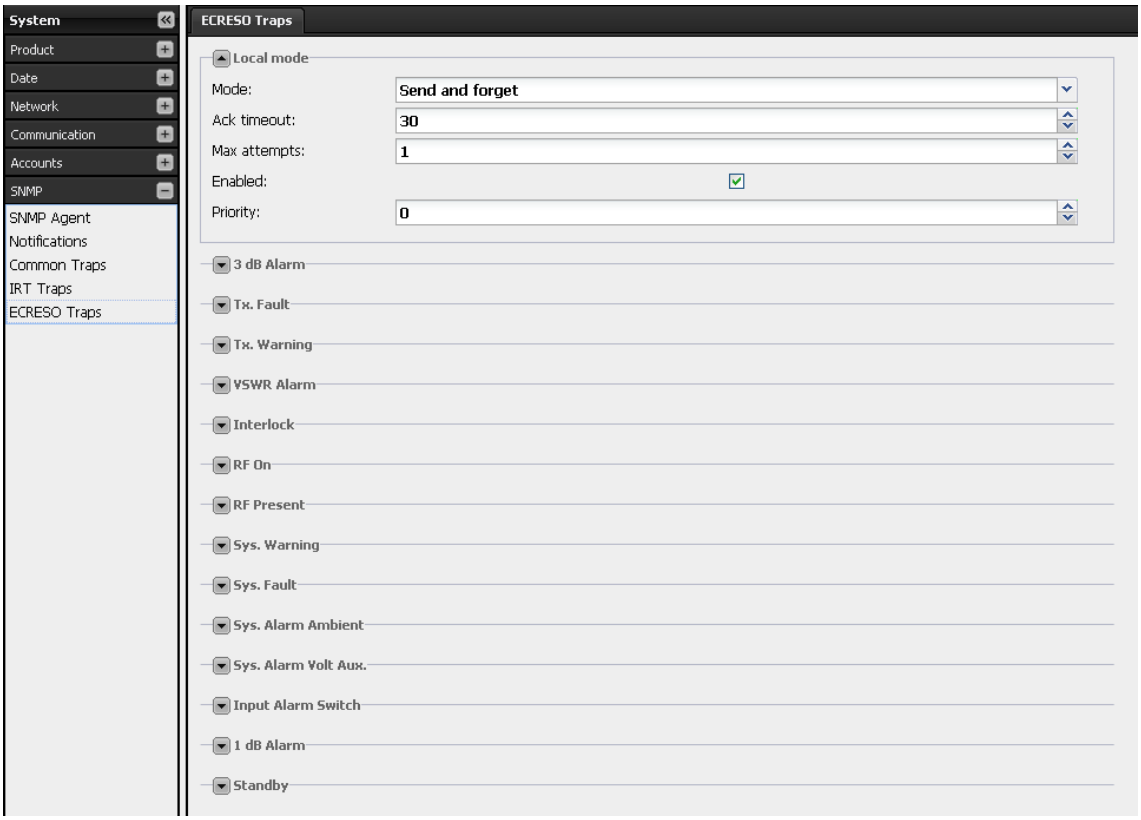


Crown Broadcast traps are configured like IRT traps (see previous section).

ⓘ *No trap is sent on automatic audio switch.*

### 9.6.11. Support

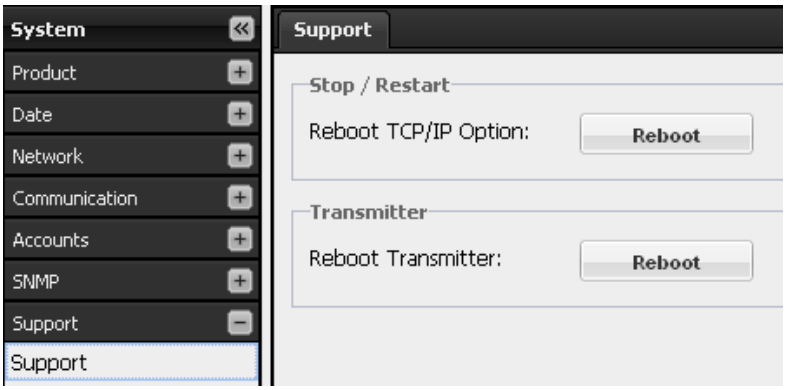


With the ‘Reboot TCP/IP option’ button, restart the TCP/IP board.

With the ‘Reboot Transmitter’ button, restart the transmitter’s front panel.


Crown Broadcast, a division of International Radio & Electronics Corporation 25166 Leer Drive, Elkhart, Indiana, 46514-5425 USA
Ph +1 (574) 262 8900

### 9.6.12. EMR

EMR (Expert Maintenance Reporting) is a service offered by your Crown Broadcast dealer to monitor your Crown Broadcast FME transmitters. A report is periodically sent to you to give you the state of the transmitters. This report may suggest corrective or preventive actions to solve potential issues or improve the performance of the transmitters.

If you have subscribed to this service, you will need to set your transmitter so it can communicate with the EMR server.

Enter its position and your EMR account ID as supplied by your dealer.

Check the box to enable EMR.

Enter the IP address of the EMR server (or web address) as supplied by your dealer and click the Test button to establish proper communication between your transmitter and the EMR server.

The EMR service program is administered by our OEM partner, WorldCast Systems, via a secure server in Miami, Florida. The reports generated by this system will allow you to take necessary corrective action to prevent transmitter issues. Questions regarding EMR can be directed to Crown Broadcast Service support who will assist directly or facilitate direct interaction between the end user and WorldCast Systems.

## 9.7. About

This window displays information regarding the web application

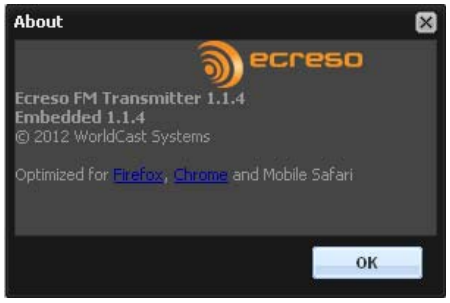

# 10. SERVICE AND SUPPORT

We understand that you may need various levels of support or that the product could require servicing at some point in time. This section provides information for both of these scenarios.

## 10.1. Service

The product warranty (see page 129) outlines our responsibility for defective products. Before returning a product for repair or replacement (our choice), call our Customer Service department using the following telephone number:

(866) 262-8917

Our Customer Service Representative will give you further instructions regarding the return of your product. Use the original shipping carton or a new one obtained from Crown Broadcast. Place shipping spacers between the slide-out power amplifier assembly and the back panel. Please fill out the Factory Service Instructions sheet (page 128) and include it with your returned product.

## 10.2. 24–Hour Support

In most instances, what you need to know about your product can be found in this manual. There are times when you may need more in-depth information or even emergency-type information. We provide 24–hour technical assistance on your product via a toll telephone call. For emergency help or detailed technical assistance, call

(866) 262-8917

You may be required to leave a message at this number but your call will be returned promptly from our on-call technician.

## 10.3. Spare Parts

To obtain spare parts, call Crown Broadcast Service at the following number.

(866) 262-8917

Or

574-262-8900

You may also write to the following address:

International Radio & Electronics Corporation

25166 Leer Drive

Elkhart, Indiana, U.S.A. 46514-5425

## 10.4. Factory Service Instructions

To obtain factory service, complete the bottom half of this page, include it with the unit, and ship to:

**International Radio & Electronics Corporation**

**25166 Leer Drive**

**Elkhart, Indiana, U.S.A. 46514-5425**

For units in warranty (within 3 years of purchase from any authorized Crown Dealer). We pay for ground UPS shipments from anywhere in the continental U.S. and Federal Express Second Day service from Hawaii and Alaska to the factory and back to you. Expedited service/shipment is available for an additional charge. You may forward your receipt for shipping charges which we will reimburse. We do not cover any charges for shipping outside the U.S. or any of the expenses involved in clearing customs.

**If you have any questions about your Crown Broadcast product, please contact Crown Broadcast Customer Service at: Telephone: (866) 262-8917 or (866) 262-8972 or (574) 262-8900 or via Fax: (866) 262-8909**

Name: Company:

Shipping Address:

Phone Number: Fax:

Model: Serial Number: Purchase Date:

**Nature of the Problem**
(Describe the conditions that existed when the problem occurred and what attempts were made to correct it.)

_____

_____

_____

_____

Other equipment in your system:
_____

If warranty has expired, payment will be: __Cash/Check __VISA __MasterCard __AMEX

__Please Quote before servicing

Card Number: _____Exp. Date:_____

Signature:_____

Return Shipment Preference if other than UPS Ground: __Expedite Shipment __Other

**PLEASE ENCLOSE THIS DOCUMENT WITH UNIT — DO NOT MAIL SEPARATELY**

# 11. CROWN BROADCAST THREE YEAR LIMITED PRODUCT WARRANTY

### Summary Of Warranty

Crown Broadcast IREC warrants its broadcast products to the ORIGINAL PURCHASER of a NEW Crown Broadcast product for a period of three (3) years after shipment from Crown Broadcast. All products are warranted to be free of defects in materials and workmanship and meet or exceed all specifications published by Crown Broadcast. Product nameplate with serial number must be intact and not altered in any way. This warranty is non - transferable. This warranty in its entirety is the only warranty offered by Crown Broadcast. No other warranties, expressed or implied, will be enforceable.

### Exclusions

Crown Broadcast will not warranty the product due to misuse, accident, neglect and improper installation or operation. Proper installation included A/C line surge suppression, lightning protection and proper grounding of the entire transmitter, and any other recommendations designated in the Instruction manual. This warranty does not extend to any other products other than those designed and manufactured by Crown Broadcast or it authorized OEM. This warranty does not cover any damage to any accessory such as loads, transmission line or antennas resulting from the use or failure of a Crown Broadcast transmitter. Warranty does not cover any loss of revenue resulting from any failure of a Crown Broadcast product, act of God, or natural disaster.

### Procedure for Obtaining Warranty Service

Crown Broadcast will repair or service, at our discretion, any product failure as a result of normal intended use. Warranty repair can only be performed at our plant facility in Elkhart, Indiana, USA, or at a factory authorized service depot. Expenses in remedying the defect will be borne by Crown Broadcast, including two-way ground transportation cost within the continental United States. Prior to returning any product or component to Crown Broadcast for warranty work or repair, a Return Authorization (RA) number must be obtained from the Crown Broadcast Customer Service Department. Product must be returned in the original factory pack or equivalent. Original factory packing materials may be obtained at a nominal charge by contacting Crown Broadcast Customer Service. Resolution of the defective product will be made within a reasonable time from the date of receipt of the defective product.

### Warranty Alterations

No person has the authority to enlarge, amend, or modify this warranty, in whole or in part. This warranty is not extended by the length of time for which the owner was deprived the use of the product. Repairs and replacement parts that are provided under the terms of this warranty shall carry only the unexpired portion of the warranty.

### Product Design Changes

Crown Broadcast reserves the right to change the design and manufacture of any product at any time without notice and without obligation to make corresponding changes in products previously manufactured.

### Legal Remedies of Purchaser

This written warranty is given in lieu of any oral or implied warranties not covered herein. Crown Broadcast disclaims all implied warranties including any warranties of merchantability or fitness for a particular purpose.


Crown Broadcast, a division of International Radio & Electronics Corporation 25166 Leer Drive, Elkhart, Indiana, 46514-5425 USA
Ph +1 (574) 262 8900

# APPENDIX A: SOFTWARE OPTION MANAGEMENT

A set of options is available for Crown Broadcast FME transmitters. Contact your Crown Broadcast dealer if you wish to install one of them after the initial transmitter purchase.

You will need to retrieve the software activation key from the transmitter and forward to your Crown Broadcast contact. From this activation key, a new key will be created which will enable the desired option. The last step will be to send it to the transmitter.

This activation process can be done using the front panel, the PC application or serial commands. Follow the selected procedure as described below.

## A.1. Using the front panel application

Display the License menu, only visible in Expert mode (first switch to Expert mode if necessary).

```
 98.00MHz      100W
   -> LICENSE >
```

Press the “Enter” button and write down the transmitter’s serial number.

```
1 SERIAL NUMBER
    00000025
```

Press the “+” key until you see this screen.

```
1   ENABLE LIC.
      -> NEW >
```

Press the “Enter” button to access the Enable License sub-menu, then press “Enter” again to generate the key for your transmitter.

```
2 GENERATE KEY
      -> GO
```

Send the serial number and the key to Crown Broadcast.

A new key will be returned to you.

To enter the new key, access the License menu then access the Enable License screen. The ‘Pending’ state indicates the transmitter awaits a new key.

```
1   ENABLE LIC.
      -> PENDING
```

Once you have received the new key, press the “Enter” button to display this screen and press Enter again to switch to edit mode.

```
2   ENTER KEY
 -> 0000000000
```

Using the “+” and “–” keys, adjust the value for each digit, press “Enter” to go to the next digit.

Press the “+” key until you see the Go To screen and select ‘License’ to return to the previous level of menus.

```
1       GO TO
 -> LICENSE  -> ADD.
```

Press the “+” key to access the Current License screen. The new license should now be part of the list.

```
1 CURRENT LICENCE
-> RDS BASIC, PLAYE
```



Crown Broadcast, a division of International Radio & Electronics Corporation 25166 Leer Drive, Elkhart, Indiana, 46514-5425 USA
Ph +1 (574) 262 8900

## A.2. Using the PC application

License management is only available with Engi version 1.1.1 (or more recent).

Connect to the transmitter with the Engi application, either with a direct connection or via the network (see section 7) and display the Tools/License Manager menu.

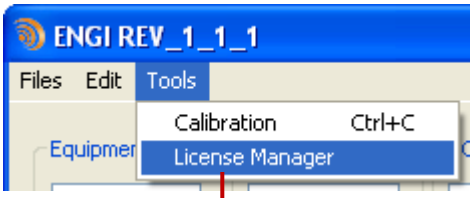


Click the 'Request an Activation Key' button: a value is generated by the transmitter and copied into the clipboard.

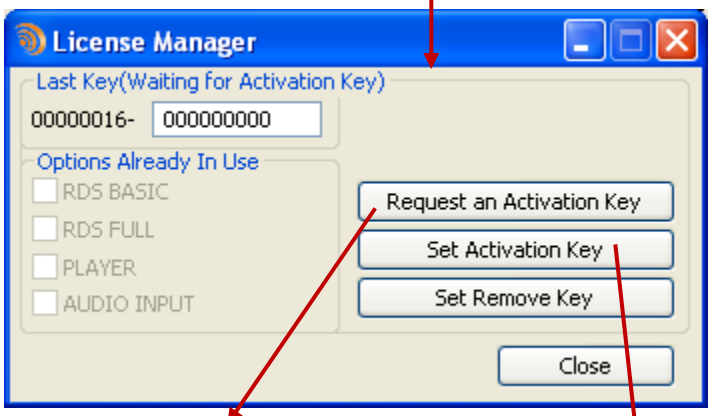


Send this key to Crown Broadcast.

A new key will be returned to you.

Once you have received the new key, display the License Manager again and click on the 'Set Activation Key' button. Copy the new key into this window and click the 'OK' button to enable the license.

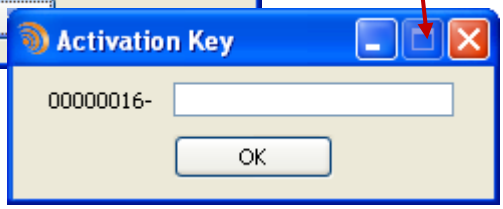


The new option is now enabled.



Crown Broadcast, a division of International Radio & Electronics Corporation 25166 Leer Drive, Elkhart, Indiana, 46514-5425 USA
Ph +1 (574) 262 8900

## A.3. Using serial commands

Connect a PC to the front panel serial port as described in section 6.

Send the command:

SYS.KEY.ADD

The return value will have the following format: *serial_number-key1.*

Send this key to Crown Broadcast.

A new key will be returned to you (*serial_number-key2*).

Once you have received the new key, send the command:

SYS.KEY.ADD= *serial_number-key2*

The unit will return:

$OPTION ACTIVATED

If the key is not recognized, the unit will return:

WRONG KEY

In that case you will need to contact Crown Broadcast.

You can check the current options by sending the command:

SYS.OPT.LIST

The unit will return the list of enabled options, including the new one.



Crown Broadcast, a division of International Radio & Electronics Corporation 25166 Leer Drive, Elkhart, Indiana, 46514-5425 USA
Ph +1 (574) 262 8900

# APPENDIX B: ADJUSTING THE IMPEDANCE OF ANALOG INPUTS

Default impedance of analog inputs is high.

It can be set to 600 Ω by jumpers.

Before setting the jumpers, make sure that all cables are disconnected. Remove all the screws securing the cover.

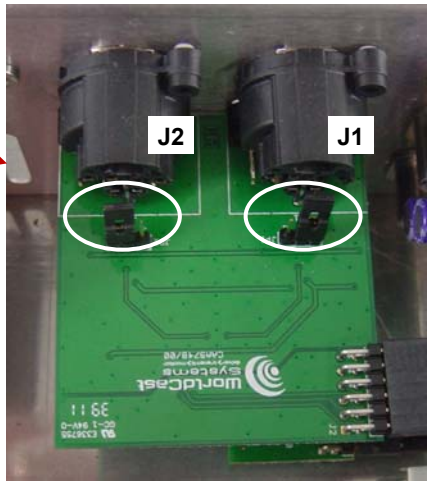


Jumper position on a type II carte board:

| | J2 | J1 |
|---|---|---|
| High impedance | ■ ■ ■ | ■ ■ ■ |
| 600 Ω | ■ ■ ■ | ■ ■ ■ |

Jumper position on a type I carte board (previous model):

| | J2 | J1 |
|---|---|---|
| High impedance | ■ ■ ■ | ■ ■ ■ |
| 600 Ω | ■ ■ ■ | ■ ■ ■ |

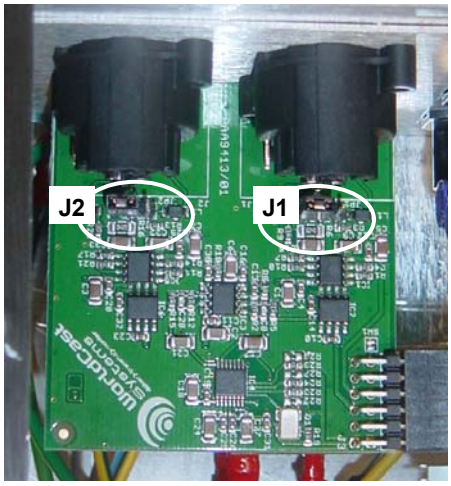



Crown Broadcast, a division of International Radio & Electronics Corporation 25166 Leer Drive, Elkhart, Indiana, 46514-5425 USA
Ph +1 (574) 262 8900

# APPENDIX C: MAINTENANCE

To order spare parts, please contact your Crown Broadcast dealer.

## C.1. Changing the fuses

Fuses are located in the power socket on the rear panel. Open the trap to remove them.

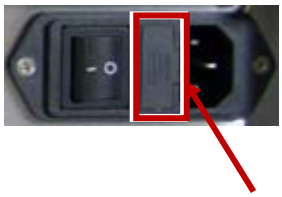

ⓘ *If you need to change the fuses, make sure the surge protector has not been damaged (see next section).*

## C.2. Changing the surge protector

To check whether the surge protector is damaged, remove the top cover. If the surge protector indicator LED is on, it is ok. If the LED is off, the surge protector needs to be replaced.

The surge protector is located between the power supply bloc and the mains filter.

1. Disconnect the unit.
2. Unscrew the top cover and remove it.
3. Using pliers, remove the metal washers that keep the surge protector in place on the rivets and unscrew the cables connecting it to the power bloc, to the mains filter and to the ground.

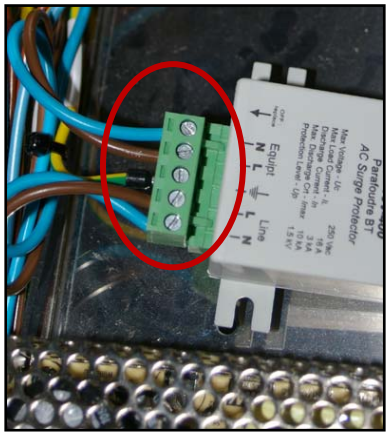

1. Replace the old surge protector with the new one.
2. Connect the 5 wires of the terminal as shown.
3. Snap the washers on the rivets to secure the surge protector in the chassis.
4. Set the cover back in place.

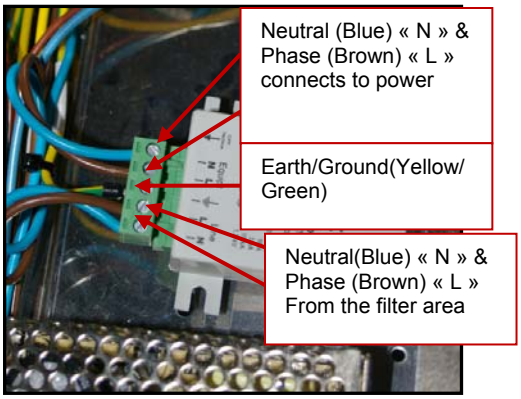


***Power***


Crown Broadcast, a division of International Radio & Electronics Corporation 25166 Leer Drive, Elkhart, Indiana, 46514-5425 USA
Ph +1 (574) 262 8900

# APPENDIX D: TROUBLESHOOTING

## D.1. Calibration

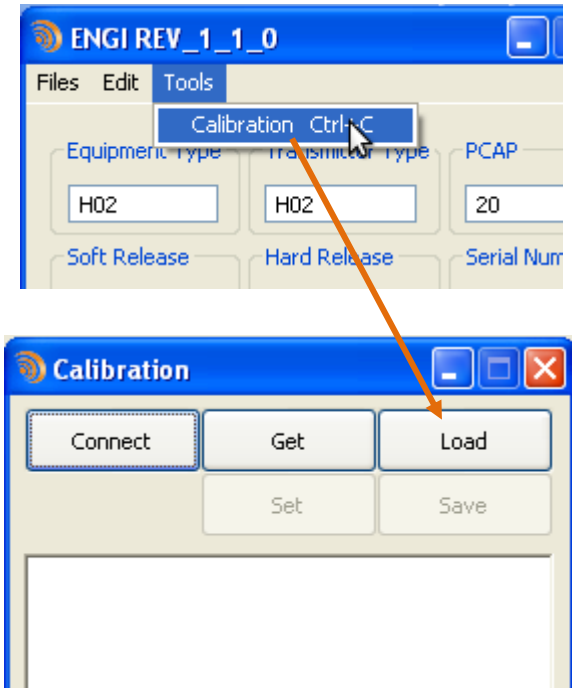


! ***Your transmitter is calibrated at the factory and should not need to be recalibrated.***
***In case it become misadjusted, first contact Crown Broadcast's technical support department. They may advise you to recalibrate the unit, in which case you will be sent the calibration file.***

Connect your module to a PC to be able to use the PC application (see section 7). Once connected, launch the application and:

- Open the Calibration window using the Tool/Calibration menu.
- Click the "Load" button and select the .cal calibration file supplied by Crown Broadcast.
- Click the "Set" button to load the calibration file into the unit.

## D.2. Complete Reset of the Crown Broadcast FME

! ***The reset procedure erases your whole configuration; however, the calibration is kept.***

Connect a PC to the front panel serial port as described in section 6.

Send the command:

SYS.RAZ=RAZ

After the module has restarted, on the front panel:

- Enter the transmitter's nominal power (example 20 for a Crown Broadcast FME 20 W).
- For **Crown Broadcast FME 20 W only**, select Yes to indicate the module acts as a central unit (mandatory in the current version).
- Set the CAN Id to 00
- Exit the Init Config menu to return to standard menus.

```
T X   P C A P
 -> 2 0
```

```
I S   C C U
 -> Y E S
```

```
I D   C A N
 -> 0 0
```

```
I N I T   C O N F I G
E X I T
```


Crown Broadcast, a division of International Radio & Electronics Corporation 25166 Leer Drive, Elkhart, Indiana, 46514-5425 USA
Ph +1 (574) 262 8900

## FOR MORE INFORMATION

Please contact:

**Crown Broadcast**
**25166 Leer Drive Elkhart, Indiana 46514-5425**
**24-Hour Service: (866) 262-8917**
**Sales: (866) 262-8972**
**General Information: (574) 262-8900**
**Fax: (574) 262-5399**
**www.crownbroadcast.com**